ACI STRUCTURAL JOURNAL TECHNICAL PAPER

Title No. S118-128

Effects of Concrete Tail Cover and Tail Kickout on Anchorage Strength of 90-Degree Hooks

by Samir Yasso, David Darwin, and Matthew O'Reilly

The effects of concrete tail cover and tail kickout on the anchorage strength of hooked bars were investigated. The study included 195 simulated beam-column joint specimens containing two No. 5, 8, or 11 (No. 16, 25, or 36) hooked bars. Bar stresses at anchorage failure ranged from 33,000 to 141,000 psi (228 to 972 MPa), and concrete compressive strengths ranged from 4490 to 16,180 psi (31 to 112 MPa). Tail cover ranged from 3/4 to 3-5/8 in. (19 to 92 mm) and tail kickout occurred for approximately 7% of the hooked bars used in the analysis. Hooked bars were placed inside or outside the column core with or without confining reinforcement in the joint region. Tail kickout was only observed in conjunction with other modes of failure and was not, in any case, the only mode of failure. The likelihood of tail kickout increases for hooked bars placed outside the column core, as compared to hooked bars placed inside the column core, as confining reinforcement within the joint region decreases, and as the size of the hooked bar increases. The anchorage strength of hooked bars with a 90-degree bend angle is not affected by hook tail covers as low as 3/4 in. (19 mm) or tail kickout at failure.

Keywords: beam-column joint; high-strength concrete; high-strength steel; hooked bars; reinforced concrete; tail cover; tail kickout.

INTRODUCTION

ACI 318-14 (ACI Committee 318 2014) included provisions that permitted the development length of hooked bars to be reduced by 30% if the hooks had a minimum side cover of 2.5 in. (65 mm) and, for 90-degree hooks, a minimum tail cover of 2 in. (50 mm). The requirements in ACI 318-14 were based on a study by Marques and Jirsa (Jirsa and Marques 1972; Marques and Jirsa 1975) of hooked bars in simulated beam-column joints with 1-1/2 and 2-7/8 in. (38 and 73 mm) side cover. The study demonstrated that anchorage strength increases when hooked bars are placed inside the longitudinal column bars and when confining reinforcement is provided in the joint region. They observed that side cover did "not seem to be too important as long as a local failure at the inside of the bend" did not occur. The effect of tail cover on anchorage strength was not investigated. Although not described using this terminology, failure modes consisted of front breakout or side splitting. Minor and Jirsa (1975) identified a third failure mode, tail kickout, in which 90-degree hooked bars straighten at failure, with the tail of the hook punching through the back cover in a beam-column joint. Sperry et al. (2015a, 2017a) examined 158 beam-column joint specimens containing No. 5, 8, or 11 (No. 16, 25, or 36) hooked bars, of which 116 had 2.5 in. (65 mm) side cover and 42 had 3.5 in. (90 mm) side cover. Sperry et al. (2015a, 2017a) observed that varying the concrete side cover between 2.5 and 3.5 in. (65 and 90 mm) did not affect anchorage strength. Studies by Sperry et al. (2015a,b, 2017a,b, 2018), Yasso et al. (2017), and Ajaam et al. (2017, 2018) served as the basis for the new hooked bar provisions in ACI 318-19 (ACI Committee 318 2019). Among the changes, the new provisions removed the requirement for minimum tail cover on 90-degree hooks.

This paper describes the effects of tail cover and tail kickout at failure on the anchorage strength of 90-degree hooked bars that justify the removal of minimum tail cover requirements for 90-degree hooks. Failure modes are identified and anchorage strengths are compared.

RESEARCH SIGNIFICANCE

The design provisions for hooked bars in ACI 318-14 allowed the modification of the calculated development length when providing adequate side and tail cover for 90-degree hooks. ACI 318-19 allows the modification of the development length for hooked bars terminating inside a column core with side cover normal to the plane of the hook of at least 2.5 in. (65 mm) or in any case where the side cover normal to the plane of the hook is at least six bar diameters. Both versions of ACI 318 require the use of minimum confining reinforcement for hooked bars at discontinuous ends of members with both side cover and top (or bottom) cover to the hook of less than 2.5 in. (65 mm). ACI 318-19 no longer requires minimum tail cover. This study investigates the effects of concrete tail cover below the minimum tail cover requirements in ACI 318-14, as well as the role of tail kickout due to low tail cover on hooked bar anchorage strength.

EXPERIMENTAL PROGRAM

This paper describes a study that is part of a larger experimental program to investigate the behavior and anchorage strength of hooked bars (Sperry et al. 2015a). The overall program included 338 beam-column joint specimens. The effect of concrete compressive strength, side cover, hook bend angle, number of hooked bars, and center-to-center spacing were addressed by Sperry et al. (2015a,b, 2017a,b), Yasso et al. (2017), and Ajaam et al. (2017, 2018). This

ACI Structural Journal, V. 118, No. 6, November 2021.
MS No. S-2020-395.R1, doi: 10.14359/51732990, received April 16, 2021, and reviewed under Institute publication policies. Pertinent discussion including author's closure, if any, will be published ten months from this journal's date if the discussion is received within four months of the paper's print publication.

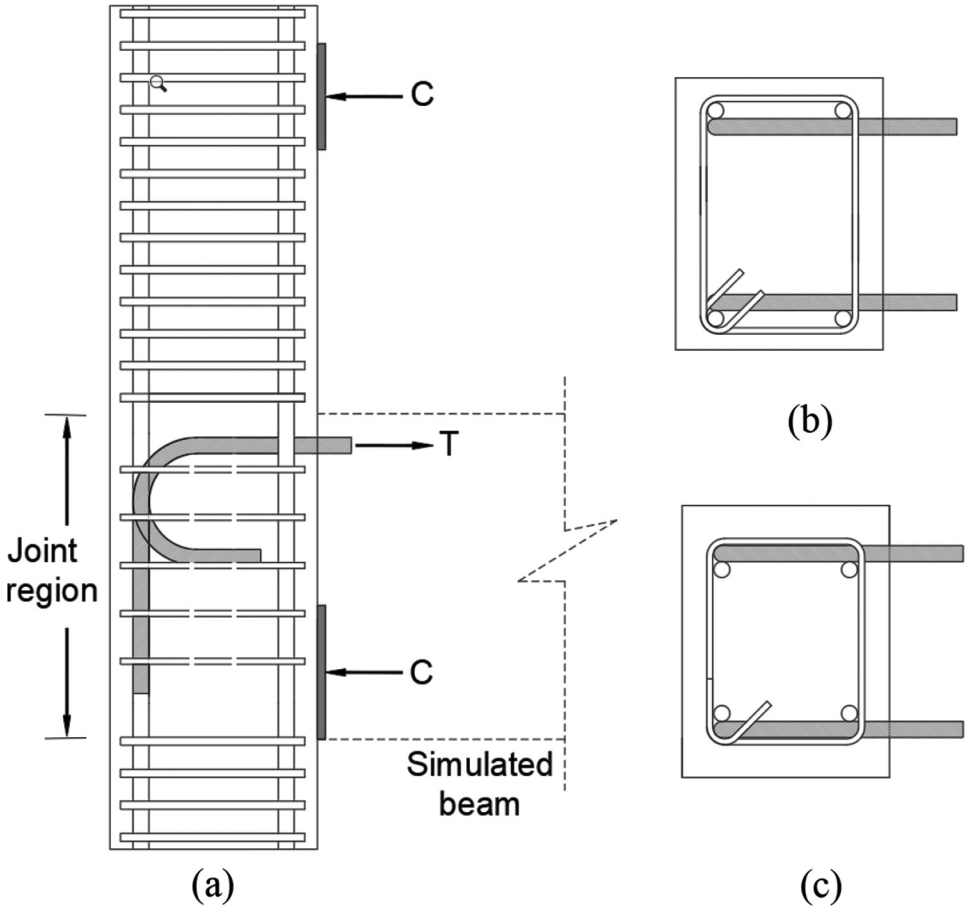

Fig. 1—Schematic of typical specimen: (a) side view of specimen; (b) cross section of specimen with two hooks inside column core with confining reinforcement; and (c) cross section of specimen with two hooks outside column core with confining reinforcement.

paper deals with a subset of these specimens. Details of the specimens are provided in Appendix A.*

The effect of low concrete tail cover on anchorage strength and mode of failure was examined using 195 specimens with two hooked bars, of which 127 specimens had confining reinforcement in the joint region and 68 did not. From the 195 specimens, a total of 381 hooked bars produced useable data for the analysis—some specimens had useable data for just one of the two hooked bars, typically because the second hooked bar reached its tensile strength prior to an anchorage failure occurring or the load reached the maximum capacity of the test apparatus. Concrete tail cover ranged from 3/4 to 3-5/8 in. (19 to 92 mm). Concrete compressive strengths ranged from 4490 to 16,180 psi (31 to 112 MPa), and stresses in the hooked bars at failure ranged from 33,000 to 141,000 psi (228 to 972 MPa).

Test specimens

The test specimens in this study (Fig. 1) were designed to simulate exterior beam-column joints. The specimens represent joints containing two hooked bars and had a nominal 2 in. (50 mm) concrete cover to the tail of the hook. Actual tail covers varied, providing an opportunity to determine the effect of a tail cover less than 2 in. (50 mm) on the anchorage strength of 90-degree hooks. The hooked bars were located either inside or outside the column core. The column core is defined as the region enclosed by the column longitudinal bars. Although placing hooked bars outside the column core is not usual in practice, hooked bars were placed outside the column core in some specimens to simulate the use of hooked bars in locations without confinement by column steel, such as at the free end of cantilever beams. Side cover for the specimens ranged from 1.5 to 4.5 in. (38 to 114 mm) with 2.5 or 3.5 in. (64 or 89 mm) side cover used for the majority of the specimens.

In this study, embedment length ℓ_{eh} refers to the distance measured from the column face to the back of the tail of the hook, while development length ℓ_{dh} refers to the minimum length required in Section 25.4.3 of ACI 318-19 to ensure a bar can develop its specified yield strength.

When proportioning the test specimens, the nominal concrete cover to the tail of the hook was added to the embedment length to determine the depth of the column. The nominal side cover was added to the out-to-out spacing of the hooks (equal to the nominal center-to-center spacing plus one hooked bar diameter) to determine the width of the column.

*The Appendix is available at **www.concrete.org/publications** in PDF format, appended to the online version of the published paper. It is also available in hard copy from ACI headquarters for a fee equal to the cost of reproduction plus handling at the time of the request.

Table 1—Concrete mixture proportions

Material	Quantity (SSD)			
Design compressive strength, psi	5000	8000	12,000	15,000
Type I/II cement, lb/yd^3	600	700	750	760
Type C fly ash, lb/yd^3	—	—	—	160
Silica fume, lb/yd^3	—	—	—	100
Water, lb/yd^3	263	225	217	233
Crushed limestone*, lb/yd^3	1734	1683	1796	—
Granite†, lb/yd^3	—	—	—	1693
Pea gravel‡, lb/yd^3	—	—	316	—
Kansas river sand§, lb/yd^3	1396	1375	1050	1138
Estimated air content, %	1	1	1	1
High-range water-reducer, oz (US)	30‖	171‖	104#	205#
w/cm	0.44	0.32	0.29	0.24

Bulk specific gravity (saturated surface-dry) = *2.60, †2.61, ‡2.59, and §2.63.

‖Admixture 1.

#Admixture 2.

Note: 1 ksi = 6.89 MPa; 1 oz = 29.57 mL; and 1 lb/yd^3 = 0.593 kg/m^3.

Column reinforcement was designed to provide adequate flexural and shear strength assuming that all hooked bars in a specimen reached the anticipated peak load simultaneously. Different levels of confining reinforcement were provided within the joint region to determine the effect of confinement on anchorage strength. Confining reinforcement in the joint region ranged from none to six No. 3 (No. 10) hoops (details are provided in Appendix A). The height of the column was selected so that the reaction at the top of the specimen would not interfere with the failure region. A column height of 52-3/4 in. (1340 mm) was used for specimens containing No. 5 or No. 8 (No. 16 or No. 25) hooked bars and a height of 96 in. (2440 mm) was used for the specimens containing No. 11 (No. 36) hooked bars.

Material properties

Normalweight concrete with nominal compressive strengths of 5000, 8000, 12,000, and 15,000 psi (34, 55, 83, and 103 MPa) was used in the study. Actual compressive strengths ranged from 4490 to 16,180 psi (31 to 112 MPa). Type I/II portland cement, crushed limestone with a maximum aggregate size of 3/4 in. (19 mm), and Kansas River sand were used in the concrete mixtures. Pea gravel was used for the 12,000 psi (83 MPa) concrete to improve workability. Polycarboxylate-based high-range water-reducing admixtures were used to achieve the required workability and strength. Mixture proportions are listed in Table 1.

The majority of hooked bars were fabricated from ASTM A1035 Grade 120 (Grade 830) steel, with the balance fabricated from ASTM A615 Grades 60 and 80 (Grades 420 and 550) steel. The properties for the reinforcing steel used for the hooked bars in the tests, including yield and tensile strength, nominal diameter, deformation height and spacing, and relative rib area, are listed in Table 2.

Due to the high flexural demand for some columns, ASTM A1035 Grade 120 (830 MPa) reinforcing bars were occasionally used as longitudinal reinforcement, but most specimens used ASTM A615 Grade 60 (420 MPa) bars as longitudinal reinforcement. ASTM A615 Grade 60 (420 MPa) was used for column ties. The details on the type of reinforcement in the individual specimens are given in Appendix A.

Loading system and test procedure

Figure 2 shows the loading system used in this study, which is a modified version of the test frame used by Marques and Jirsa (1975). The system simulates the forces applied at an exterior beam-column joint by applying tensile loads to the hooked bars. Each bar was loaded independently by a hydraulic jack. The force representing the compression reaction in the beam is provided by the steel Bearing Member. The Upper Compression Member prevents the column from overturning and is placed so as to not interfere with the failure region. The flange widths for the Upper Compression Member and Bearing Member were 6-5/8 and 8-3/8 in. (168 and 213 mm), respectively. The locations of the reaction forces (bearing members) for the different size hooked bars, measured from the center of the hooked bar, are shown in Table 3. A detailed description of the test apparatus is provided by Peckover and Darwin (2013).

Axial compressive loads were placed on the column to more accurately simulate column loading conditions. For specimens with No. 5 and No. 8 (No. 16 and No. 25) hooked bars, a constant axial force of 30,000 lb (133,447 N) was applied to the specimens, producing axial stresses of 90 to 460 psi (0.62 to 3.17 MPa). A constant axial stress of 280 psi (1.93 MPa) was applied to specimens with No. 11 (No. 36) hooked bars. Some of the early tests had a constant force of 80,000 lb (356,000 N), which resulted in axial stress on specimens ranging from 505 to 1930 psi (3.48 to 13.31 MPa). Marques and Jirsa (1975) found that differences in axial stress up to 3000 psi (21 MPa) did not affect the anchorage

Table 2—Hooked bar properties

Bar size	ASTM specification	Yield strength, ksi*	Tensile strength, ksi	Nominal diameter, in.	Average deformation spacing, in.	Average deformation height		Gap width		Relative rib area‡
						A†, in.	B‡, in.	Side 1, in.	Side 2, in.	
5 (16)	A615	69	108	0.625	0.417	0.031	0.029	0.179	0.169	0.060
5 (16)	A1035	128	160	0.625	0.391	0.038	0.034	0.200	0.175	0.073
8 (25)	A615	76	95	1.0	0.666	0.059	0.056	0.146	0.155	0.073
8 (25)§	A1035	131	167	1.0	0.686	0.068	0.065	0.186	0.181	0.084
8 (25)‖	A1035	135	168	1.0	0.574	0.057	0.052	0.16	0.157	0.078
8 (25)#	A1035	129	168	1.0	0.666	0.056	0.059	0.146	0.155	0.073
11 (36)	A615	84	113	1.41	0.894	0.080	0.074	0.204	0.196	0.069
11 (36)	A1035	123**	164**	1.41	0.830	0.098	0.088	0.248	0.220	0.085

*From mill test report, unless otherwise noted.

†Per ASTM A615 and A706.

‡Per ACI 408.3R-09.

§Heat 1.

‖Heat 2.

#Heat 3.

**From tensile test.

Note: 1 in. = 25.4 mm; 1 ksi = 6.89 MPa.

Table 3—Location of reaction forces

	Size of hooked bar		
	No. 5	No. 8	No. 11
Height of specimen, in.*	52-3/4	52-3/4	96
Distance from center of hook to top of bearing member flange h_{cl}, in.*	5-1/4	10	19-1/2
Distance from center of hook to bottom of upper compression member flange h_{cu}, in.*	18-1/2	18-1/2	48-1/2

*Refer to Fig. 2.

Note: 1 in. = 25.4 mm; No. 5 (No. 16); No. 8 (No. 25); No. 11 (No. 36).

strength of the hooked bars; thus, the effect of different values of axial stress was not examined in this study.

Hydraulic jacks were used to apply the tensile forces to the hooked bars, simulating tensile forces in beam negative moment reinforcement. Load was applied monotonically in steps of 5000 or 10,000 lb (22,200 or 44,500 N) depending on the specimen size. Loading was paused after each step to allow cracks to be marked. The force on each hooked bar was measured using a load cell. Anchorage strength was taken as the average force per hooked bar corresponding to the maximum total force at failure. The maximum force for each hooked bar was also recorded and used when the individual hooked bar strength was evaluated, although this did not, in general, coincide with the maximum total force on the system.

TEST RESULTS AND DISCUSSION

This section describes the modes of failure observed during the tests and the effects of concrete tail cover and tail kickout on anchorage strength. Anchorage strengths are compared for specimens and individual hooked bars, where the test-to-calculated strength ratios were calculated using a descriptive equation for two widely spaced hooked bars developed by Sperry et al. (2015b, 2017b) and presented later in this paper. As described earlier, hooked bars were placed inside or outside the column core. Prior studies have found that hooked bars placed outside the column core have lower anchorage strengths than hooked bars placed inside the column core (Sperry et al. 2015a; Yasso et al. 2017). Student's t-test (Draper and Smith 1981) is used to determine if the differences in anchorage strength of hooked bars with low tail cover and hooked bars that comply with concrete cover requirements in Section 25.4.3.2 of ACI 318-14 are statistically significant.

Failure modes

Three failure modes were observed for beam-column joint specimens: front breakout (F), in which a mass of concrete is pulled out with the hooked bars from the front face of the column; side splitting (S), in which the side face of the column spalls off after vertical cracks form in the plane of a hook; and tail kickout (TK), where the tail of a 90-degree hook pushes the concrete cover off of the back of the column. Tail kickout (TK) was only observed in conjunction with other failure types. The majority of the specimens containing two hooked bars experienced a combination of more than one failure mode, with front breakout predominating. Examples of the failure modes are shown in Fig. 3.

Effects of hooked bar tail cover

This section examines the effect of having tail cover less than the 2 in. (50 mm) minimum required by Section 25.4.3.2 of ACI 318-14 to apply the 0.7 modification factor to the development length of hooks with a 90-degree bend angle. In addition to a tail cover of 2 in. (50 mm) for the 90-degree hooks, Section 25.4.3.2 of ACI 318-14 required a minimum side cover of 2.5 in. (65 mm) for both 90- and 180-degree hooks.

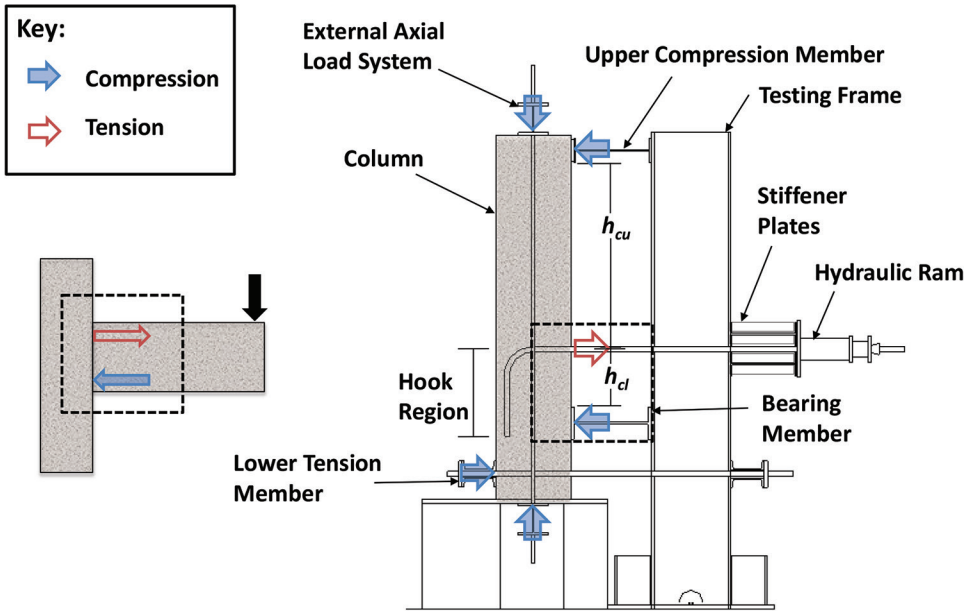

Fig. 2—Test frame.

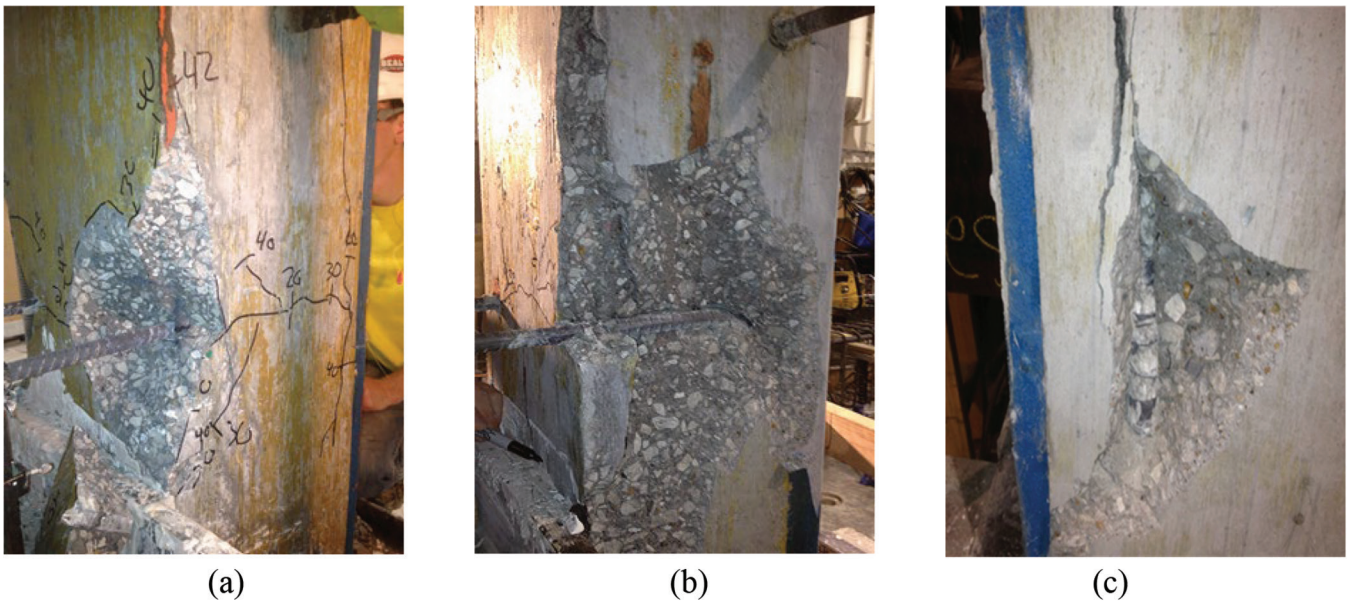

Fig. 3—Failure modes: (a) front breakout (F); (b) side splitting (S); and (c) tail kickout (TK).

The comparisons are based on the 195 specimens in this study that contained two hooked bars, 167 with hooked bars placed inside the column core and 28 with hooked bars placed outside the column core. The comparisons include all 381 hooked bars that produced useable data, 329 inside the column core, and 52 outside the column core (some specimens had usable data for only one of the two hooks). Because actual covers and embedment lengths may vary for hooked bars in the same specimen, the peak load on an individual hooked bar at failure T_{ind} in addition to the average peak load on the hooked bars T is used when analyzing the effect of tail cover on anchorage strength. The average peak load on the hooked bars, T, is obtained by dividing the maximum total load on a group of hooked bars by the number of bars.

Measured average or individual anchorage strengths are compared with anchorage strengths calculated using Eq. (1). The equation was developed by Sperry et al. (2015b) using T from specimens with two widely spaced hooked bars placed inside the column core

$$T_h = 332 f_{cm}^{0.29} \ell_{eh}^{1.06} d_b^{0.54} + 54,250 \left(\frac{NA_{tr}}{n} \right)^{1.06} d_b^{0.59} \quad (1)$$

where T_h is the force in a hooked bar at failure (lb); f_{cm} is the measured concrete compressive strength using 6 x 12 in. (150 x 300 mm) standard cylinders at the time of test (psi); ℓ_{eh} is the hooked bar embedment length (in.); d_b is the hooked bar diameter (in.); N is the number of legs of confining reinforcement parallel to the straight portion of the hooked bars within a distance of $8d_b$ from the top of the hooked bar for bars up to No. 8 (No. 25) and $10d_b$ for from the top of the bar for No. 9 through No. 11 (No. 29 through

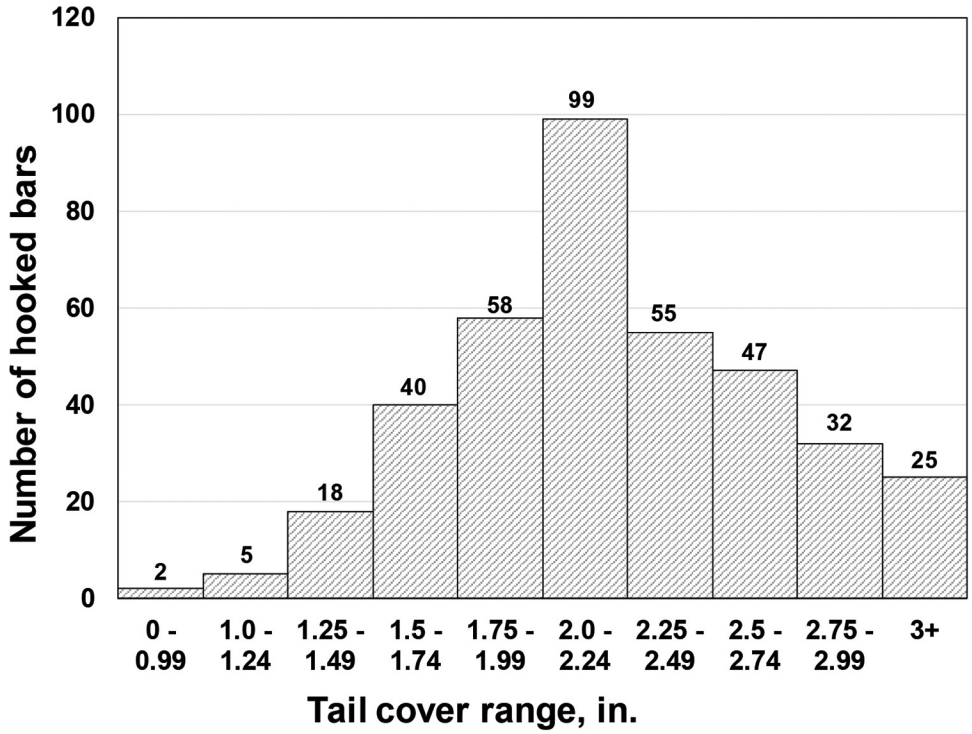

Fig. 4—Tail cover distribution for hooked bars used in current study. (Note: 1 in. = 25.4 mm.)

No. 36) bars; A_{tr} is the area of a single leg of confining reinforcement (in.^{2}); and n is the number of hooked bars in the joint confined by N legs of confining reinforcement. Equation (1) has a mean test-to-calculated strength ratio T/T_h of 1.0 for specimens both without and with confining reinforcement. For specimens without and with confining reinforcement, the coefficients of variation are 0.119 and 0.112, the minimum test-to-calculated strength ratios are 0.73 and 0.68, and the maximum test-to-calculated strength ratios are 1.29 and 1.28, respectively (Sperry et al. 2015b).

The average values of T_{ind}/T_h for the specimens containing two hooked bars without and with confining reinforcement inside the column core used to develop Eq. (1) are 1.05 and 1.04, respectively, compared to a value of 1.0 for T/T_h. Because individual hooked bars will reach their peak loads at different points of time (and not necessarily at the peak load for the specimen as a whole), it is expected that the average values of T_{ind}/T_h would exceed those of T/T_h. For specimens with hooked bars placed outside the column core, the average T_{ind}/T_h are 0.99 and 0.89 for specimens without and with confining reinforcement, respectively, compared to values of T/T_h of 0.90 and 0.84 for specimens without and with confining reinforcement obtained when using the average peak load T.

Figure 4 shows the distribution of the actual tail cover for the hooked bars in this study. Out of the 381 hooked bars examined, 123 had a tail cover below 2 in. (50 mm); of these, 110 were inside the column core, and 13 were outside the column core.

Tables 4 and 5 include the mean, standard deviation, and coefficient of variation for the test-to-calculated strength ratios for individual hooked bars T_{ind}/T_h and the average peak load T/T_h for specimens without and with confining reinforcement, respectively. The hooked bars are classified based on location (inside or outside the column core). The tables show the values for five categories: hooks with tail cover less than 1-1/2 in. (38 mm), hooks with tail cover from 1-1/2 to 2 in. (38 to 50 mm), hooks with tail cover less than 2 in. (50 mm), hooks with a tail cover of 2 in. (50 mm) or greater, and hooks exhibiting tail kickout. Student's t-test is used to determine if the differences in the values of T_{ind}/T_h and T/T_h between those for the different categories and those for the hooked bars with tail cover of 2 in. (50 mm) or greater, the minimum cover required by Section 25.4.3.2 of ACI 318-14 to apply the 0.7 modification factor to development length, are statistically significant. The parameter p from Student's t-test, also shown in Tables 4 and 5, represents the probability that the difference in the mean value between the set under consideration and that of the set with tail cover greater than or equal to 2 in. (50 mm) is due to random variations. Values of p smaller than a selected threshold ($p = 0.05$ for this study) indicate that the differences in datasets are statistically significant.

Hooked bars with tail cover less than 1-1/2 in. (38 mm)—Based on Table 20.5.1.3.1 in ACI 318-19, the minimum cover that beams and columns can have when not exposed to weather or in contact with the ground is 1-1/2 in. (38 mm). In this study, 25 hooked bars in 21 specimens had a tail cover less than 1-1/2 in. (38 mm); 23 of these hooked bars were inside the column core, 17 without confining reinforcement and six with. The two specimens with hooked bars outside the column core had confining reinforcement.

For the 17 hooked bars with tail cover less than 1-1/2 in. (38 mm), no confining reinforcement, placed inside the column core, the average value of T_{ind}/T_h is 1.08, compared to 1.04 for hooked bars with tail cover of 2 in. (50 mm) or greater. This difference (a reduction with increasing cover) is not statistically significant ($p = 0.24$), indicating that the

Table 4—Mean, standard deviation, and coefficient of variation for T_{ind}/T_h and T/T_h without confining reinforcement, with T_h based on Eq. (1)

		Hooked bars (Results based on T_{ind}/T_h)		Specimens (Results based on T/T_h)	
Hook location		Outside core	Inside core	Outside core	Inside core
Hooked bars with tail cover < 1-1/2 in. 17 hooked bars (14 specimens)	Mean	—	1.08	—	1.01
	STD	—	0.11	—	0.10
	COV	—	0.11	—	0.10
	p^*	—	0.24	—	0.59
	No. of hooked bars or specimens	0	17	0	14
Hooked bars with tail cover ≥ 1-1/2 and < 2.0 in. 32 hooked bars (23 specimens)	Mean	1.05	1.04	0.92	0.98
	STD	0.13	0.17	0.16	0.13
	COV	0.12	0.17	0.17	0.13
	p	0.37	0.87	0.73	0.70
	No. of hooked bars or specimens	5	27	4	19
Hooked bars with tail cover < 2 in. 49 hooked bars (34 specimens)	Mean	1.05	1.05	0.92	1.00
	STD	0.13	0.15	0.16	0.12
	COV	0.12	0.14	0.17	0.12
	p	0.37	0.69	0.73	0.91
	No. of hooked bars or specimens	5	44	4	30
Hooked bars with tail cover ≥ 2 in. 84 hooked bars (52 specimens)	Mean	0.98	1.04	0.89	1.00
	STD	0.19	0.13	0.13	0.11
	COV	0.19	0.13	0.14	0.11
	p	N/A	N/A	N/A	N/A
	No. of hooked bars or specimens	21	63	12	40
Hooks exhibiting tail kickout 22 hooked bars (17 specimens)	Mean	0.95	1.05	0.93	1.02
	STD	0.12	0.12	0.16	0.11
	COV	0.12	0.11	0.17	0.11
	p	0.42	0.08	0.82	0.44
	No. of hooked bars or specimens	6	16	4	13

*Probability that difference in the mean value of the set under consideration and that of the set with tail cover ≥ 2 in. (50 mm) is due to random variation. For this study, values of 0.05 and less indicate differences are statistically significant.

Note: 1 in. = 25.4 mm.

reduction in tail cover did not impact the strength of these specimens. For the six hooked bars with tail cover less than 1-1/2 in. (38 mm), with confining reinforcement, placed inside the column core, T_{ind}/T_h is 0.95, compared to 1.05 when hooked bars with tail cover of 2 in. (50 mm) or greater; the difference is statistically significant (p = 0.02). For the two hooked bars with tail cover less than 1-1/2 in. (38 mm), with confining reinforcement, placed outside the column core, T_{ind}/T_h is 1.11, compared to 0.87 for hooked bars with tail cover of 2 in. (50 mm) or greater; the difference is statistically significant (p = 0.03). Hooked bars placed outside the column core are expected to have lower test-to-calculated strength ratios when compared to T_h calculated using Eq. (1) than hooked bars placed inside the column core, but the average T_{ind}/T_h value of 1.11 for the two hooked bars with confining reinforcement placed outside column core shows the opposite. The comparisons show that the average value of T_{ind}/T_h for hooked bars with a tail cover less than 1-1/2 in. (38 mm) for the two comparisons based on small samples is larger in one case and smaller in the other than for hooked bars with a tail cover of 2 in. (50 mm) or greater. The differences in both cases are statistically significant. In the third case, based on a larger sample size, T_{ind}/T_h for hooked bars with a tail cover less than 1-1/2 in. (38 mm) is greater than for hooked bars with tail cover of 2 in. (50 mm) or greater, but the difference is not statistically significant. Overall, tail cover below 1-1/2 in. (38 mm) does not influence anchorage strength.

Table 5—Mean, standard deviation, and coefficient of variation for T_{ind}/T_h and T/T_h with confining reinforcement, with T_h based on Eq. (1)

		Hooked bars (Results based on T_{ind}/T_h)		Specimens (Results based on T/T_h)	
Hook location		Outside core	Inside core	Outside core	Inside core
Hooked bars with tail cover < 1-1/2 in. 8 hooked bars (7 specimens)	Mean	1.11	0.95	0.90	0.94
	STD	0.06	0.07	0.07	0.09
	COV	0.06	0.08	0.08	0.09
	p^*	0.03	0.02	0.33	0.20
	No. of hooked bars or specimens	2	6	2	5
Hooked bars with tail cover ≥ 1-1/2 and < 2.0 in. 66 hooked bars (54 specimens)	Mean	0.87	1.07	0.85	1.02
	STD	0.15	0.12	0.16	0.10
	COV	0.17	0.12	0.19	0.10
	p	0.98	0.28	0.76	0.20
	No. of hooked bars or specimens	6	60	5	49
Hooked bars with tail cover < 2 in. 74 hooked bars (56 specimens)	Mean	0.93	1.06	0.85	1.02
	STD	0.17	0.13	0.14	0.10
	COV	0.18	0.12	0.17	0.10
	p	0.43	0.59	0.72	0.25
	No. of hooked bars or specimens	8	66	6	50
Hooked bars with tail cover ≥ 2 in. 174 hooked bars (106 specimens)	Mean	0.87	1.05	0.82	1.00
	STD	0.17	0.15	0.16	0.12
	COV	0.19	0.15	0.19	0.12
	p	N/A	N/A	N/A	N/A
	No. of hooked bars or specimens	18	156	12	94
Hooks exhibiting tail kickout 3 hooked bars (3 specimens)	Mean	—	0.97	—	0.95
	STD	—	0.05	—	0.04
	COV	—	0.05	—	0.04
	p	—	0. 08	—	0.10
	No. of hooked bars or specimens	0	3	0	3

*Probability that difference in the mean value of the set under consideration and that of the set with tail cover ≥ 2 in. (50 mm) is due to random variation. For this study, values of 0.05 and less indicate differences are statistically significant.

Note: 1 in. = 25.4 mm.

Hooked bars with tail cover less than 2 in. (50 mm)—In the current study, a total of 123 hooked bars in 90 specimens had a tail cover less than 2 in. (50 mm); 110 were inside the column core, 44 without confining reinforcement and 66 with confining reinforcement; and 13 were outside the column core, five without confining reinforcement and eight with confining reinforcement. These hooked bars include the 25 hooked bars with tail cover less than 1-1/2 in. (38 mm) described previously. While the differences are not as extreme as when comparing hooked bars with tail cover less than 1-1/2 in. (38 mm) with those with tail cover of 2 in. (50 mm) or greater, looking at hooked bars with tail cover less than 2 in. (50 mm) provides a larger database for comparison. For the 44 hooked bars with tail cover less than 2 in. (50 mm), without confining reinforcement, placed inside the column core, T_{ind}/T_h is 1.05. For the 66 hooked bars with tail cover less than 2 in. (50 mm), with confining reinforcement, placed inside the column core, T_{ind}/T_h is 1.06. These values are virtually identical to the values of 1.04 and 1.05 for hooked bars with tail cover of 2 in. (50 mm) or greater without and with confining reinforcement, respectively. Student's t-test shows that the differences in anchorage strength are not statistically significant, with p equal to 0.69 and 0.59 for hooked bars without and with confining reinforcement, respectively. For the five hooked bars with tail cover less than 2 in. (50 mm), without confining reinforcement, placed outside the column core, T_{ind}/T_h is 1.05. For the eight hooked bars with tail cover less than 2 in. (50 mm), with confining reinforcement, and

Table 6—Hooked bars exhibiting tail kickout versus bar size

Bar size		All bar sizes	No. 5	No. 8	No. 11
Outside column core	Without confining reinforcement	6	—	3	3
	With confining reinforcement	—	—	—	—
Inside column core	Without confining reinforcement	16	1	6	9
	With confining reinforcement	3	—	—	3
Number of hooked bars (% with respect to the same bar size)		25 (6.6%)	1 (1.0%)	9 (4.9%)	15 (16.0%)

Note: No. 5 (No. 16); No. 8 (No. 25); No. 11 (No. 36).

hooks placed outside the column core, T_{ind}/T_h is 0.93. These values compare with 0.98 and 0.87 for hooked bars placed outside the column core with tail cover of 2 in. (50 mm) or greater. The values of p from Student's t-test are above 0.05 for these specimens, which along with the mean values indicate that tail cover less than 2 in. (50 mm) did not affect anchorage strength.

Effects of tail kickout

Out of the 381 hooked bars used to determine the effect of tail cover on anchorage strength, 25 hooked bars (6.6%) in 20 specimens exhibited tail kickout, as shown in Table 6. Of these, 19 were anchored inside the column core and six were anchored outside the column core. Sixteen of the hooked bars inside the column core had confining reinforcement and three did not, while the six hooked bars outside the column core did not have confining reinforcement. For hooked bars exhibiting tail kickout, the average T_{ind}/T_h is 1.05 for hooked bars inside the column core without confining reinforcement, as shown in Table 4. This value of T_{ind}/T_h is identical to the value for hooked bars not exhibiting tail kickout. For hooked bars inside the column core with confining reinforcement, only three No. 11 (No. 36) hooked bars exhibited tail kickout. The average value of T_{ind}/T_h is 0.97 compared to the average T_{ind}/T_h of 1.04 for all hooked bars placed inside column core with confining reinforcement. This difference in strength, however, is not statistically significant (p = 0.08). For the six hooked bars placed outside the column core without confining reinforcement that exhibited tail kickout, the average value of T_{ind}/T_h is 0.95, compared to the average T_{ind}/T_h of 0.97 for all hooked bars placed outside the column core without confining reinforcement. This difference in strength is again not statistically significant (p = 0.42). When comparing the average values of T_{ind}/T_h for the hooked bars exhibiting tail kickout with those for all specimens, Student's t-test shows that the differences in anchorage strength are not statistically significant, demonstrating that the occurrence of tail kickout does not affect the anchorage strength of hooked bars.

Table 6 shows the number of hooked bars that exhibited tail kickout based on bar size. The table shows that out of the 25 hooked bars exhibiting tail kickout, 15 were No. 11 (No. 36) bars, nine were No. 8 (No. 25) bars, and one was a No. 5 (No. 16) bar, representing 16.0, 4.9, and 1.0% of the tests for the respective bar sizes, indicating that for a given cover, the larger the bar size, the greater the tendency to exhibit tail kickout. Despite the tendency of the larger bars to exhibit tail kickout, the anchorage strength of these bars was unaffected, with mean values of T_{ind}/T_h equal to 0.89, 1.10, and 1.01 for No. 5, No. 8, and No. 11 (No. 16, No. 25, and No. 36) bars placed inside the column core, respectively, and a mean value of T_{ind}/T_h equal to 0.95 for both No. 8 and No. 11 (No. 25 and No. 36) bars placed outside the column core, respectively.

SUMMARY AND CONCLUSIONS

In this study, 195 specimens with two hooked bars (381 individual hooked bars) were used to investigate the effects of having tail cover less than 2 in. (50 mm) (the minimum cover required by Section 25.4.3.2 of ACI 318-14 to allow the use of the development length modification factor of 0.7 on anchorage strength) and the occurrence of tail kickout at failure on anchorage strength. The specimens were cast in normalweight concrete and contained two No. 5, 8, and 11 (No. 16, 25, and 36) hooked bars. Bar stresses at failure ranged from 33,000 to 141,000 psi (228 to 972 MPa) and concrete compressive strength ranged from 4490 to 16,180 psi (31 to 112 MPa). Tail cover ranged from 3/4 to 3-5/8 in. (19 to 92 mm) and tail kickout occurred for approximately 7% of the hooked bars used in the analysis. Out of the 195 specimens used to evaluate the tail cover effect, 167 specimens had hooked bars placed inside the column core, of which 54 had no confining reinforcement and 113 had confining reinforcement within the joint region. Twenty-eight specimens had the hooked bars placed outside the column core. Of these, 14 had no confining reinforcement and 14 had confining reinforcement within the joint region.

The following conclusions are based on the test results and analyses described in this study.

1. Tail kickout was only observed in conjunction with other modes of failure and was not, in any case, the only mode of failure.

2. The likelihood of tail kickout increases for hooked bars placed outside the column core, as compared to hooked bars placed inside the column core, as confining reinforcement within the joint region decreases, and as the size of the hooked bar increases.

3. The anchorage strength of hooked bars with a 90-degree bend angle is not affected by hook tail covers as low as 3/4 in. (19 mm) or tail kickout at failure.

AUTHOR BIOS

ACI member **Samir Yasso** *is a Faculty Member at the University of Mosul, Mosul, Iraq. He received his BSc and MSc in civil engineering from the University of Mosul and his PhD degree in civil engineering from the*

University of Kansas, Lawrence, KS. He is a member of Joint ACI-ASCE Committee 408, Bond and Development of Steel Reinforcement.

ACI Honorary Member **David Darwin** *is the Deane E. Ackers Distinguished Professor and Chair of the Department of Civil, Environmental, and Architectural Engineering at the University of Kansas and a Past President of ACI. He is a member of ACI Committees 222, Corrosion of Metals in Concrete; 224, Cracking; 318, Structural Concrete Building Code; ACI Subcommittees 318-B, Anchorage and Reinforcement, and 318-N, Sustainability; and Joint ACI-ASCE Committees 408, Bond and Development of Steel Reinforcement; 445, Shear and Torsion; and 446, Fracture Mechanics of Concrete.*

ACI member **Matthew O'Reilly** *is an Associate Professor of Civil, Environmental, and Architectural Engineering at the University of Kansas. He received his BS in mechanical engineering from the University of Rochester, Rochester, NY, and his MS and PhD in civil engineering from the University of Kansas. He is a member of ACI Committees 123, Research and Current Developments, and 222, Corrosion of Metals in Concrete; and Joint ACI-ASCE Committee 408, Bond and Development of Steel Reinforcement.*

ACKNOWLEDGMENTS

Support for the study was provided by the Electric Power Research Institute (EPRI), Concrete Reinforcing Steel Institute Education and Research Foundation, University of Kansas Transportation Research Institute, Charles Pankow Foundation, Commercial Metals Company, Gerdau Corporation, Nucor Corporation, and MMFX Technologies Corporation. Additional materials were supplied by Dayton Superior, Midwest Concrete Materials, and W. R. Grace Construction. Thanks are due to K. Barry and M. Ruis, who provided project oversight for the Advanced Nuclear Technology Program of EPRI, and to N. Anderson, C. Kopczynski, M. Mota, J. Munshi, and C. Paulson who served as industry advisors

REFERENCES

ACI Committee 318, 2014, "Building Code Requirements for Structural Concrete (ACI 318-14) and Commentary (ACI 318R-14)," American Concrete Institute, Farmington Hills, MI, 518 pp.

ACI Committee 318, 2019, "Building Code Requirements for Structural Concrete (ACI 318-19) and Commentary (ACI 318R-19)," American Concrete Institute, Farmington Hills, MI, 623 pp.

Joint ACI-ASCE Committtee 408, "Guide for Lap Splice and Development Length of High Relative Rib Area Reinf Bars in Tension (ACI 408.3R-09) and Commentary," American Concrete Institute, Farmington Hills, MI, 8 pp.

Ajaam, A.; Darwin, D.; and O'Reilly, M., 2017, "Anchorage Strength of Reinforcing Bars with Standard Hooks," *SM Report* No. 125, University of Kansas Center for Research, Lawrence, KS, 365 pp.

Ajaam, A.; Yasso, S.; Darwin, D.; O'Reilly, M.; and Sperry, J., 2018, "Anchorage Strength of Closely-Spaced Hooked Bars," *ACI Structural Journal*, V. 115, No. 4, July-Aug., pp. 1143-1152. doi: 10.14359/51702065

ASTM A1035/A1035M-14, 2014, "Standard Specification for Deformed and Plain Low-Carbon, Chromium, Steel Bars for Concrete Reinforcement," ASTM International, West Conshohocken, PA, 7 pp.

ASTM A615/A615M-15, 2015, "Standard Specification for Deformed and Plain Carbon-Steel Bars for Concrete Reinforcement," ASTM International, West Conshohocken, PA, 8 pp.

Draper, N. R., and Smith, H., 1981, *Applied Regression Analysis*, second edition, Wiley, New York, 709 pp.

Jirsa, J. O., and Marques, J. L. G., 1972, "A Study of Hooked Bar Anchorages in Beam-Column Joints," *Reinforced Concrete Research Council Project* 33, University of Texas at Austin Structures Research Laboratory, Austin, TX, 92 pp.

Marques, J. L. G., and Jirsa, J. O., 1975, "A Study of Hooked Bar Anchorages in Beam-Column Joints," *ACI Journal Proceedings*, V. 72, No. 5, May, pp. 198-209.

Minor, J., and Jirsa, J. O., 1975, "Behavior of Bent Bar Anchorages," *ACI Journal Proceedings*, V. 72, No. 4, Apr., pp. 141-149.

Peckover, J., and Darwin, D., 2013, "Anchorage of High-Strength Reinforcing Bars with Standard Hooks: Initial Tests," *SL Report* No. 13-1, University of Kansas Center for Research, Lawrence, KS, 47 pp.

Sperry, J.; Al-Yasso, S.; Searle, N.; DeRubeis, M.; Darwin, D.; O'Reilly, M.; Matamoros, A.; Feldman, L.; Lepage, A.; Lequesne, R.; and Ajaam, A., 2015a, "Anchorage of High-Strength Reinforcing Bars With Standard Hooks," *SM Report* No. 111, University of Kansas Center for Research, Lawrence, KS, 260 pp.

Sperry, J.; Darwin, D.; O'Reilly, M.; Lepage, A.; Lequesne, R.; Matamoros, A.; Feldman, L.; Yasso, S.; Searle, N.; DeRubeis, M.; and Ajaam, A., 2018, "Conventional and High-Strength Steel Hooked Bars: Detailing Effects," *ACI Structural Journal*, V. 115, No. 1, Jan.-Feb., pp. 247-257. doi: 10.14359/51700920

Sperry, J.; Darwin, D.; O'Reilly, M.; and Lequesne, R., 2015b, "Anchorage Strength of Conventional and High-Strenth Hooked Bars in Concrete," *SM Report* No. 115, University of Kansas Center for Research, Lawrence, KS, 281 pp.

Sperry, J.; Darwin, D.; O'Reilly, M.; Matamoros, A.; Feldman, L.; Lepage, A.; Lequesne, R.; and Yasso, S., 2017b, "Conventional and High-Strength Hooked Bars—Part 2: Data Analysis," *ACI Structural Journal*, V. 114, No. 1, Jan.-Feb., pp. 267-276. doi: 10.14359/51689457

Sperry, J.; Yasso, S.; Searle, N.; DeRubeis, M.; Darwin, D.; O'Reilly, M.; Matamoros, A.; Feldman, L.; Lepage, A.; and Lequesne, R., 2017a, "Conventional and High-Strength Hooked Bars—Part 1: Anchorage Tests," *ACI Structural Journal*, V. 114, No. 1, Jan.-Feb., pp. 255-266. doi: 10.14359/51689457

Yasso, S.; Darwin, D.; and O'Reilly, M., 2017, "Anchorage Strength of Standard Hooked Bars in Simulated Exterior Beam-Column Joints," *SM Report* No. 124, University of Kansas Center for Research, Lawrence, KS, 330 pp.

APPENDIX A: NOTATION AND COMPREHENSIVE DATA TABLES

A.1 Longitudinal Column Steel Layouts

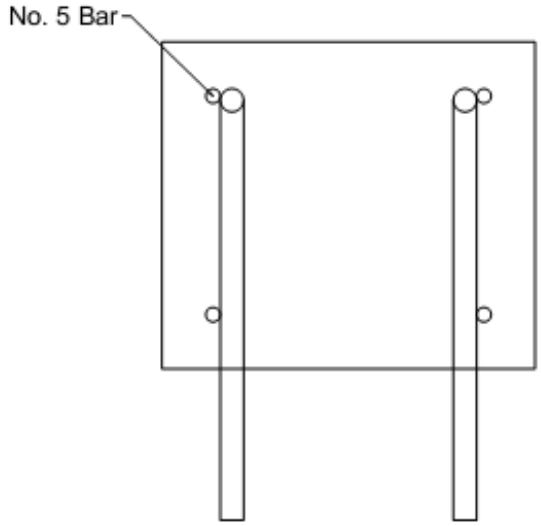

Figure A1: Longitudinal column reinforcement-4 No. 5 bars. Transverse reinforcement not shown.

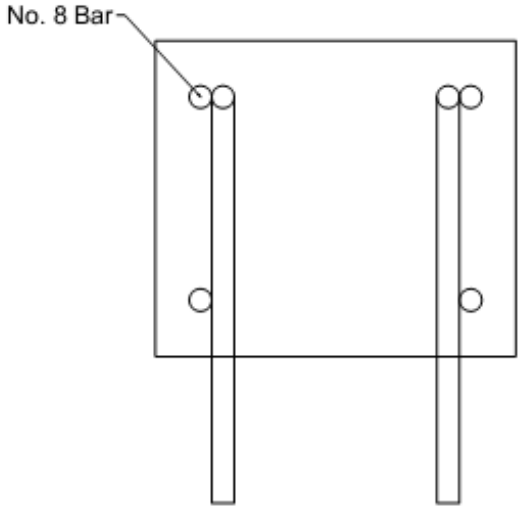

Figure A2: Longitudinal column reinforcement-4 No. 8 bars. Transverse reinforcement not shown.

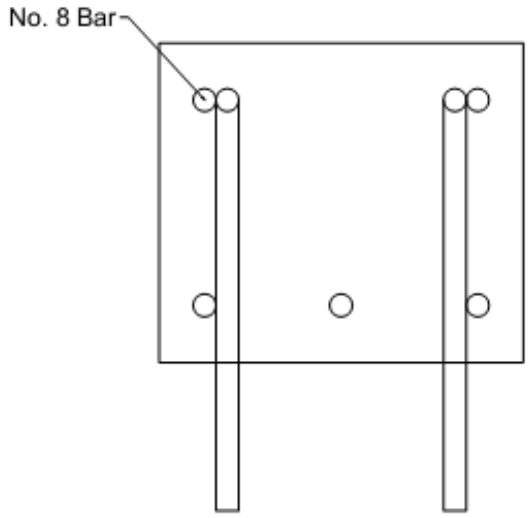

Figure A3: Longitudinal column reinforcement-5 No. 8 bars. Transverse reinforcement not shown.

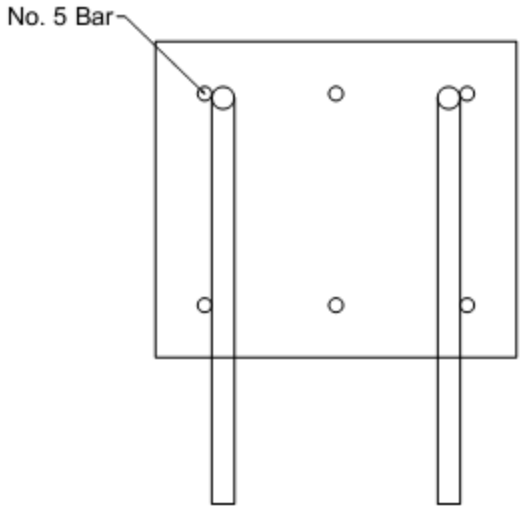

Figure A4: Longitudinal column reinforcement-6 No. 5 bars. Transverse reinforcement not shown.

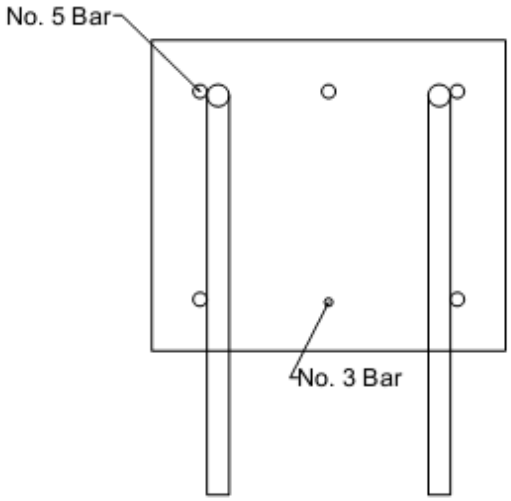

Figure A5: Longitudinal column reinforcement-5 No. 5 bars + 1 No. 3 bar. Transverse reinforcement not shown.

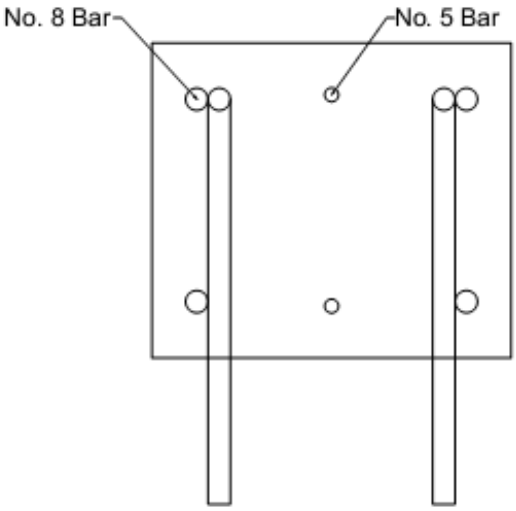

Figure A6: Longitudinal column reinforcement-4 No. 8 bars + 2 No. 5 bars. Transverse reinforcement not shown.

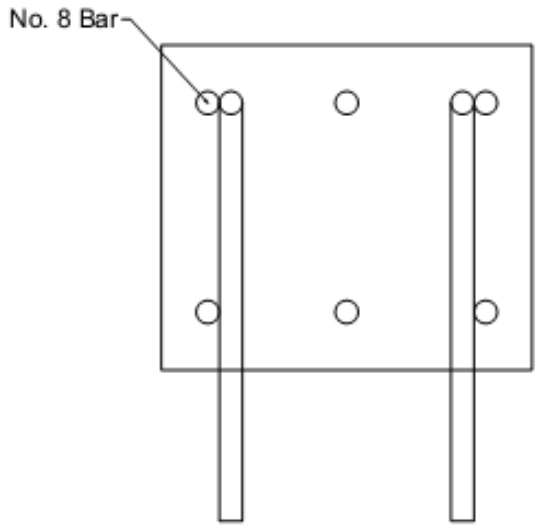

Figure A7: Longitudinal column reinforcement-6 No. 8 bars. Transverse reinforcement not shown.

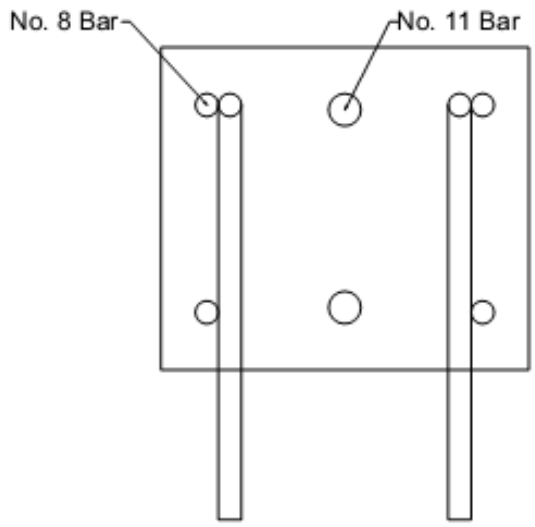

Figure A8: Longitudinal column reinforcement-4 No. 8 bars + 2 No. 11 bars. Transverse reinforcement not shown.

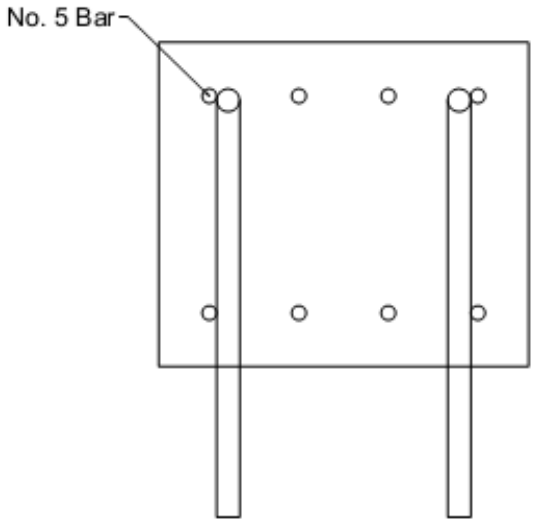

Figure A9: Longitudinal column reinforcement-8 No. 5 bars. Transverse reinforcement not shown.

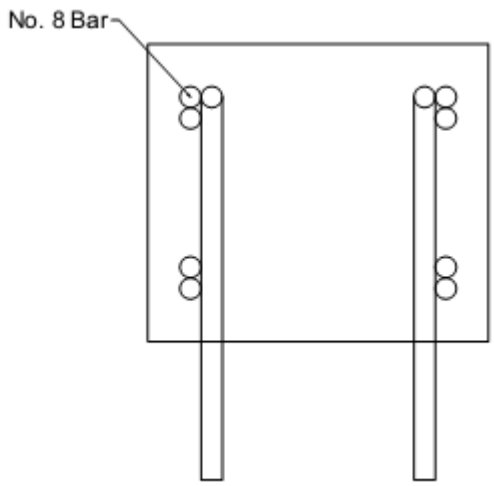

Figure A10: Longitudinal column reinforcement-8 No. 8 bars (four bundles of two bars each). Transverse reinforcement not shown.

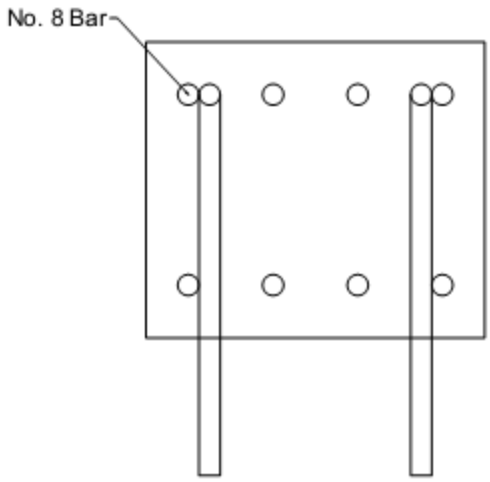

Figure A11: Longitudinal column reinforcement-8 No. 8 bars (distributed across two column faces). Transverse reinforcement not shown.

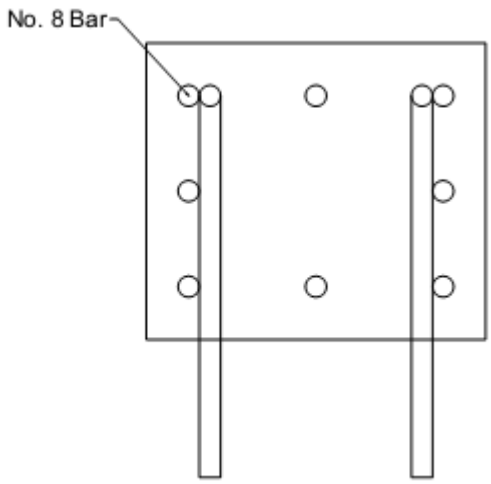

Figure A12: Longitudinal column reinforcement-8 No. 8 bars (distributed across four column faces). Transverse reinforcement not shown.

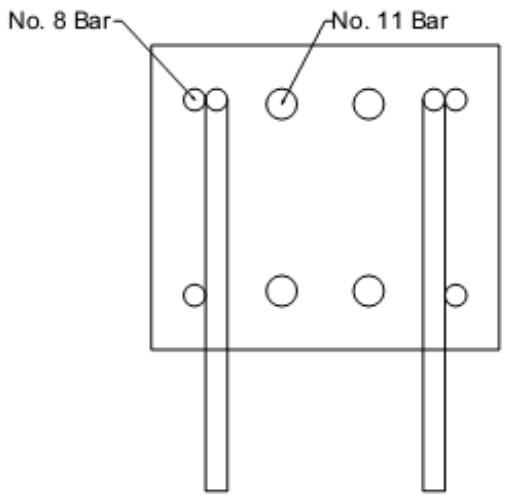

Figure A13: Longitudinal column reinforcement-4 No. 8 bars + 4 No. 11 bars. Transverse reinforcement not shown. Not included in current analysis.

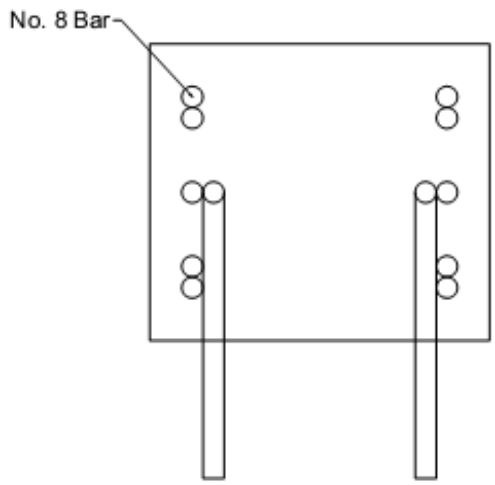

Figure A14: Longitudinal column reinforcement-10 No. 8 bars. Transverse reinforcement not shown. Not included in current analysis.

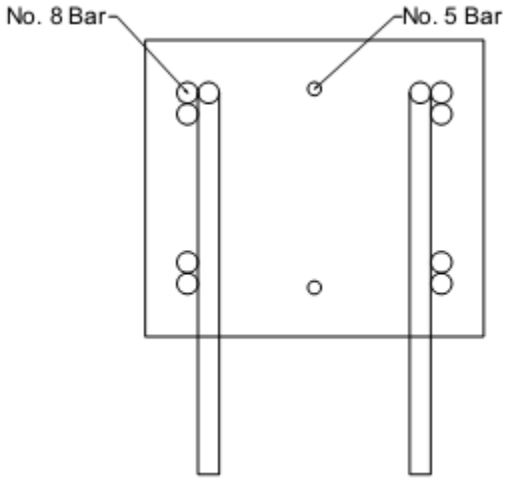

Figure A15: Longitudinal column reinforcement-8 No. 8 bars + 2 No. 5 bars. Transverse reinforcement not shown.

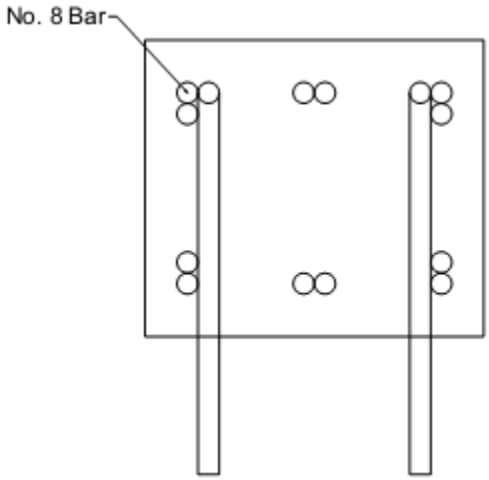

Figure A16: Longitudinal column reinforcement-12 No. 8 bars. Transverse reinforcement not shown.

A.2 Notation

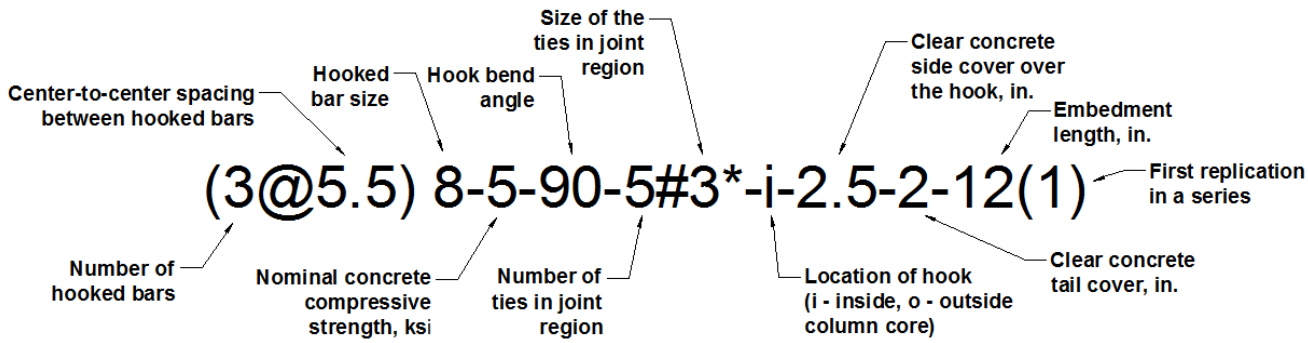

* For the vertical confining reinforcement, size of the ties in hook region is followed by 'vr', and its absence indicates that the horizontal confining reinforcement is provided.

Figure A.1 Example specimen designation

A_h	Bar area of hook
A_{tr}	Total area of transverse steel inside hook region
A_s	Area of longitudinal steel in the column
A_{cti}	Total area of cross-ties inside the hook region
b	Column width
c_b	Clear cover measured from the center of the hook to the side of the column
c_h	Clear spacing between hooked bars, inside-to-inside spacing
c_{so}	Clear cover measured from the side of the hook to the side of the column
$c_{so,avg}$	Average clear cover of the hooked bars
c_{th}	Clear cover measured from the tail of the hook to the back of the column
d_b	Nominal bar diameter of the hooked bar
d_{cto}	Nominal bar diameter of cross-ties outside the hook region
d_{tr}	Nominal bar diameter of transverse reinforcement inside the hook region
d_s	Nominal bar diameter of transverse reinforcing steel outside the hook region
f'_c	Specified concrete compressive strength
f_{cm}	Measured average concrete compressive strength
$f_{s,\mathrm{ACI}}$	Stress in hook as calculated by Section 25.4.3.1 of ACI 318-14

$f_{su,\mathrm{ind}}$ Stress in hook at failure

f_{su} Average peak stress in hooked bars at failure

f_{yt} Nominal yield strength of transverse reinforcement

f_{ys} Nominal yield strength of longitudinal reinforcing steel in the column

h_c Width of bearing member flange

h_{cl} Height measured from the center of the hook to the top of the bearing member flange

h_{cu} Height measured from the center of the hook to the bottom of the upper compression member

ℓ_{eh} Embedment length measured from the back of the hook to the front of the column

$\ell_{eh,avg}$ Average embedment length of hooked bars

n Number of hooked bars confined by N legs

N Number of legs of confining reinforcement in joint region

N_{cti} Total number of cross-ties used as supplemental reinforcement inside the hook region

N_{cto} Number of crossties used per layer as supplemental reinforcement outside the hook region and spaced at s_s

N_h Number of hooked bars loaded simultaneously

N_{tr} Number of stirrups/ties crossing the hook

T Average peak load on hooked bars

T_c Contribution of concrete to hooked bar anchorage capacity

T_{ind} Peak load on the hooked bar at failure

T_h Hooked bar anchorage strength

T_s Contribution of confining steel in joint region to hooked bar anchorage strength

T_{max} Maximum load on individual hooked bar

T_{total} Sum of the loads on hooked bars at failure

R_r Relative rib area

s_{cti} Center-to-center spacing of cross-ties in the hook region

s_{tr} Center-to-center spacing of transverse reinforcement in the hook region

s_s Center-to-center spacing of stirrups/ties outside the hook region

α Student's t-test significance

ψ_e Epoxy coating factor as defined in ACI 318-14 Section 25.4.3.2

ψ_c Factor for cover as defined in ACI 318-14 Section 25.4.3.2

ψ_r Factor for transverse reinforcement in the hook region

ψ_o Factor for hooked bar location

ψ_m Hooked bar spacing factor

Failure types

F Front Failure

S Side Failure

TK Tail Kickout

FL Flexural Failure of column

BY Yield of hooked bars

Specimen identification

(A@B) C-D-E-F#G-H-I-J-Kx(L)

A Number of hooks in the specimen

B Clear spacing between hooks in terms of bar diameter
(A@B = blank, indicates standard 2-hook specimen)

C ASTM in.-lb bar size

D Nominal compressive strength of concrete

E Angle of bend

F Number of bars used as transverse reinforcement within the hook region

G ASTM in.-lb bar size of transverse reinforcement
(if D#E = 0 = no transverse reinforcement)

H Hooked bars placed inside (i) or outside (o) of longitudinal reinforcement

I Nominal value of c_{so}

J Nominal value of c_{th}

K Nominal value of ℓ_{eh}

x Replication in a series, blank (or a), b, c, etc.

L Replication not in a series

Table A.1 Data and test results for specimens with No. 5 hooked bars

	Specimen	Hook	Bend Angle	Trans. Reinf. Orient.	Hook Bar Type	ℓ_{eh} in.	$\ell_{eh,avg}$ in.	f'_c psi	Age days	d_b in.
1	5-5-90-0-o-1.5-2-5	A B	90°	Para	A615	5.0 5.0	5.0	4930	4	0.625
2	5-5-90-0-o-1.5-2-6.5	A B	90°	Para	A1035	6.5 5.9	6.2	5650	6	0.625
3	5-5-90-0-o-1.5-2-8	B	90°	Para	A1035	7.9	7.9	5650	6	0.625
4	5-5-90-0-o-2.5-2-5	A B	90°	Para	A615	4.8 4.8	4.8	4930	4	0.625
5	5-5-90-0-o-2.5-2-8	A	90°	Para	A1035	9.0	9.0	5780	7	0.625
6	5-5-90-0-i-2.5-2-10	A B	90°	Para	A1035	9.4 9.4	9.4	5230	6	0.625
7	5-5-90-0-i-2.5-2-7	A B	90°	Para	A1035	6.9 7.0	6.9	5190	7	0.625
8	5-8-90-0-i-2.5-2-6	A B	90°	Para	A615	6.8 6.8	6.8	8450	14	0.625
9	5-8-90-0-i-2.5-2-6(1)	A B	90°	Para	A1035	6.1 6.5	6.3	9080	11	0.625
10	5-8-90-0-i-2.5-2-8	A B	90°	Para	A1035	8.0 7.5	7.8	8580	15	0.625
11	5-12-90-0-i-2.5-2-10	A B	90°	Para	A1035	10.0 11.0	10.5	10290	14	0.625
12	5-12-90-0-i-2.5-2-5	A B	90°	Para	A1035	5.1 4.8	4.9	11600	84	0.625
13	5-15-90-0-i-2.5-2-5.5	A B	90°	Para	A1035	6.1 5.8	5.9	15800	62	0.625
14	5-15-90-0-i-2.5-2-7.5	A B	90°	Para	A1035	7.3 7.3	7.3	15800	62	0.625
15	5-5-90-0-i-3.5-2-10	A B	90°	Para	A1035	10.5 10.4	10.4	5190	7	0.625
16	5-5-90-0-i-3.5-2-7	A B	90°	Para	A1035	7.5 7.6	7.6	5190	7	0.625
17	5-8-90-0-i-3.5-2-6	A B	90°	Para	A615	6.3 6.4	6.3	8580	15	0.625
18	5-8-90-0-i-3.5-2-6(1)	A B	90°	Para	A1035	6.5 6.6	6.6	9300	13	0.625
19	5-8-90-0-i-3.5-2-8	A B	90°	Para	A1035	8.6 8.5	8.6	8380	13	0.625
20	5-12-90-0-i-3.5-2-5	A B	90°	Para	A1035	5.5 5.4	5.4	10410	15	0.625

Table A.2 Cont. Data and test results for specimens with No. 5 hooked bars

	Hook	R_r	b in.	h in.	h_{cl} in.	h_c in.	c_{so} in.	$c_{so,avg}$ in.	c_{th} in.	c_h in.	N_h	Axial Load kips	Long. Reinf. Layout[o]
1	A B	0.077	11.3	7.0	5.25	8.375	1.5 1.8	1.6	2.0 2.0	6.8	2	80	A1
2	A B	0.073	11.0	8.6	5.25	8.375	1.5 1.6	1.6	2.0 2.8	6.6	2	80	A4
3	B	0.073	11.9	10.0	5.25	8.375	1.5	1.5	2.1	6.6	2	80	A1
4	A B	0.077	12.6	6.9	5.25	8.375	2.5 2.5	2.5	2.1 2.1	6.4	2	80	A1
5	A	0.073	12.1	11.2	5.25	8.375	2.6	2.6	1.5	6.6	2	80	A1
6	A B	0.073	13.1	12.3	5.25	8.375	2.8 2.6	2.7	2.9 2.9	6.4	2	30	A4
7	A B	0.073	13.0	9.6	5.25	8.375	2.5 2.5	2.5	2.8 2.6	6.8	2	30	A1
8	A B	0.073	13.0	8.0	5.25	8.375	2.8 2.6	2.7	1.3 1.3	6.4	2	80	A1
9	A B	0.073	13.3	8.8	5.25	8.375	2.5 2.5	2.5	2.6 2.3	7.0	2	30	A1
10	A B	0.073	13.1	10.0	5.25	8.375	2.5 2.8	2.6	2.0 2.5	6.6	2	80	A1
11	A B	0.073	12.8	12.5	5.25	8.375	2.4 2.5	2.4	2.5 1.5	6.6	2	30	A4
12	A B	0.073	13.0	7.3	5.25	8.375	2.6 2.6	2.6	2.1 2.5	6.5	2	30	A1
13	A B	0.073	12.6	7.7	5.25	8.375	2.4 2.4	2.4	1.6 1.9	6.6	2	30	A1
14	A B	0.073	12.9	9.8	5.25	8.375	2.5 2.5	2.5	2.6 2.6	6.6	2	30	A2
15	A B	0.073	14.8	12.3	5.25	8.375	3.5 3.5	3.5	1.8 1.9	6.5	2	30	A4
16	A B	0.073	15.1	8.8	5.25	8.375	3.4 3.5	3.4	1.3 1.1	7.0	2	30	A1
17	A B	0.073	15.0	8.0	5.38	8.375	3.6 3.5	3.6	1.8 1.6	6.6	2	80	A1
18	A B	0.073	15.6	8.6	5.25	8.375	3.8 3.8	3.8	2.1 1.9	6.9	2	30	A1
19	A B	0.060	15.5	10.0	5.25	8.375	3.6 3.5	3.6	1.4 1.5	7.1	2	80	A1
20	A B	0.073	15.5	7.2	5.25	8.375	3.6 3.6	3.6	1.7 1.8	7.0	2	30	A1

[o] Longitudinal column configurations shown in Appendix A, Figures A1 – A16

Table A.3 Cont. Data and test results for specimens with No. 5 hooked bars

	Hook	T_{max} lb	T_{ind} lb	T_{total} lb	T lb	T_h lb	T/Th	$f_{su,max}$ psi	f_{su} psi	$f_{s,ACI}$ psi	Joint shear at failure/ $\sqrt{f_{cm}}$
1	A B	14139 19575	14029 14108	28137	14069	16701	0.84	45609 63147	45382	40122	3.6
2	A B	20758 18187	17440 18187	35627	17813	21824	0.82	66962 58667	57463	53261	3.5
3	B	23455	23455	23455	23455	28121	0.83	75663	75663	67650	1.8
4	A B	19559 23982	19559 19007	38566	19283	15817	1.22	63094 77362	62204	38116	4.4
5	A	30340	30340	30340	30340	32611	0.93	97870	97870	78198	2.1
6	A B	37404 32864	34303 32864	67166	33583	33080	1.02	120656 106012	108333	77484	4.1
7	A B	26607 26095	26607 25922	52529	26265	23988	1.09	85831 84176	84724	57119	4.1
8	A B	27578 32135	27102 32038	59140	29570	26839	1.10	88961 103663	95387	70913	4.3
9	A B	21741 24995	21741 23109	44849	22425	25525	0.88	70131 80630	72338	68744	2.8
10	A B	31878 35934	31469 31878	63347	31673	31209	1.01	102831 115915	102172	82042	3.6
11	A B	40823 42491	40823 42491	83314	41657	45391	0.92	131688 137066	134377	121728	3.6
12	A B	19389 23171	19389 19051	38441	19220	21121	0.91	62546 74745	62001	60775	2.6
13	A B	36163 32373	32648 32373	65021	32511	28089	1.16	116656 104430	104873	85295	3.7
14	A B	42470 41977	42464 41977	84441	42221	34712	1.22	137001 135410	136196	104150	3.7
15	A B	43228 41140	43228 40626	83855	41927	36985	1.13	139446 132710	135250	85935	4.5
16	A B	27197 25884	27197 25836	53033	26516	26284	1.01	87732 83498	85537	62265	3.9
17	A B	25129 29054	25129 25822	50950	25475	25110	1.01	81060 93723	82178	66825	3.2
18	A B	24440 27541	24440 24643	49083	24541	26783	0.92	78838 88842	79166	72327	2.7
19	A B	39109 34311	31179 34311	65490	32745	34452	0.95	126159 110679	105629	89581	3.2
20	A B	22045 23158	22040 22201	44241	22121	22672	0.98	71114 74702	71357	63404	2.7

Table A.4 Cont. Data and test results for specimens with No. 5 hooked bars

	Hook	Slip at Failure in.	Failure Type	f_{yt} ksi	d_{tr} in.	$A_{tr,l}$ in.^{2}	N_{tr}	s_{tr} in.	A_{cti} in.^{2}	N_{cti}	s_{cti} in.	d_s in.	s_s in.	d_{cto} in.	N_{cto}	A_s in.^{2}	f_{ys} ksi
1	A B	- -	F/S F/S	60	-	-	-	-	0.88	4[1]	2.5	0.375	2.50	-	-	1.27	60
2	A B	- -	F F/S	60	-	-	-	-	0.88	4[1]	2.5	0.375	2.50	-	-	1.89	60
3	B	-	S	60	-	-	-	-	0.88	4[1]	2.5	0.375	2.50	-	-	1.27	60
4	A B	- -	F/S F/S	60	-	-	-	-	0.88	4[1]	2.5	0.375	2.50	-	-	1.27	60
5	A	-	S	60	-	-	-	-	0.88	4[1]	2.5	0.375	2.50	-	-	1.27	60
6	A B	- -	F/S F/S	60	-	-	-	-	0.33	3	3.0	0.375	3.00	-	-	1.89	60
7	A B	- 0.192	F/S F/S	60	-	-	-	-	0.80	4	2.5	0.500	3.50	-	-	1.27	60
8	A B	- -	F/S S/F	60	-	-	-	-	0.80	4	4.0	0.500	4.00	-	-	1.27	60
9	A B	0.296 .330(.030)	F F	60	-	-	-	-	0.66	6	3.0	0.500	3.00	-	-	1.27	60
10	A B	- -	S/F S/F	60	-	-	-	-	0.80	4	4.0	0.500	4.00	-	-	1.27	60
11	A B	0.191 -	S F/S/TK	60	-	-	-	-	0.11	1	7.0	0.375	5.00	-	-	1.89	60
12	A B	- -	F/S F	60	-	-	-	-	0.66	6	2.5	0.500	3.00	-	-	1.27	60
13	A B	- -	F F	60	-	-	-	-	-	-	-	0.375	2.50	-	-	1.27	60
14	A B	- -	F *	60	-	-	-	-	-	-	-	0.375	3.50	-	-	3.16	60
15	A B	- -	S/F S/F	60	-	-	-	-	0.33	3	3.0	0.375	3.00	-	-	1.89	60
16	A B	- -	S F/S	60	-	-	-	-	0.80	4	2.5	0.375	3.50	-	-	1.27	60
17	A B	- -	F/S F/S	60	-	-	-	-	0.80	4	4.0	0.500	4.00	-	-	1.27	60
18	A B	0.152 .178(.150)	F/S F/S	60	-	-	-	-	0.66	6	3.0	0.500	3.00	-	-	1.27	60
19	A B	- -	F/S S	60	-	-	-	-	0.80	4	4.0	0.500	4.00	-	-	1.27	60
20	A B	- -	F F	60	-	-	-	-	0.66	6	2.5	0.500	3.00	-	-	1.27	60

[1]Specimen had full stirrups around the longitudinal bars in the hook region but not around the hooked bars
*Test terminated prior to failure of second hooked bar

Table A.5 Cont. Data and test results for specimens with No. 5 hooked bars

	Specimen	Hook	Bend Angle	Trans. Reinf. Orient.	Hook Bar Type	ℓ_{eh} in.	$\ell_{eh,avg}$ in.	f'_c psi	Age days	d_b in.
21	5-5-90-1#3-i-2.5-2-8	A B	90°	Para	A1035	8.0 7.6	7.8	5310	6	0.625
22	5-5-90-1#3-i-2.5-2-6	A B	90°	Para	A615	4.8 5.5	5.1	5800	9	0.625
23	5-8-90-1#3-i-2.5-2-6	A B	90°	Para	A615	6.0 6.3	6.1	8450	14	0.625
24	5-8-90-1#3-i-2.5-2-6(1)	A B	90°	Para	A1035	6.1 5.6	5.9	9300	13	0.625
25	5-8-90-1#3-i-3.5-2-6	A B	90°	Para	A1035	6.0 6.0	6.0	8710	16	0.625
26	5-8-90-1#3-i-3.5-2-6(1)	A B	90°	Para	A1035	6.3 6.3	6.3	9190	12	0.625
27	5-5-90-1#4-i-2.5-2-8	A B	90°	Para	A1035	7.4 7.8	7.6	5310	6	0.625
28	5-5-90-1#4-i-2.5-2-6	A B	90°	Para	A615	5.3 5.8	5.5	5860	8	0.625
29	5-8-90-1#4-i-2.5-2-6	A B	90°	Para	A1035	5.9 6.0	6.0	9300	13	0.625
30	5-8-90-1#4-i-3.5-2-6	A B	90°	Para	A1035	6.0 7.0	6.5	9190	12	0.625
31	5-5-90-2#3-i-2.5-2-8	A B	90°	Para	A1035	8.0 7.5	7.8	5860	8	0.625
32	5-5-90-2#3-i-2.5-2-6	A B	90°	Para	A615	6.0 5.8	5.9	5800	9	0.625
33	5-8-90-2#3-i-2.5-2-6	A B	90°	Para	A1035	6.0 6.0	6.0	8580	15	0.625
34	5-8-90-2#3-i-2.5-2-8	A B	90°	Para	A1035	8.3 8.5	8.4	8380	13	0.625
35	5-12-90-2#3-i-2.5-2-5	A B	90°	Para	A1035	5.8 5.8	5.8	11090	83	0.625
36	5-15-90-2#3-i-2.5-2-6	A B	90°	Para	A1035	6.3 6.5	6.4	15800	61	0.625
37	5-15-90-2#3-i-2.5-2-4	A B	90°	Para	A1035	3.5 4.0	3.8	15800	61	0.625
38	5-5-90-2#3-i-3.5-2-6	A B	90°	Para	A1035	6.0 5.8	5.9	5230	6	0.625
39	5-5-90-2#3-i-3.5-2-8	A B	90°	Para	A1035	7.9 7.5	7.7	5190	7	0.625
40	5-8-90-2#3-i-3.5-2-6	A B	90°	Para	A1035	6.5 6.0	6.3	8580	15	0.625
41	5-8-90-2#3-i-3.5-2-8	A B	90°	Para	A1035	7.1 7.0	7.1	8710	16	0.625
42	5-12-90-2#3-i-3.5-2-5	A B	90°	Para	A1035	5.6 5.3	5.4	10410	15	0.625
43	5-8-90-4#3-i-2.5-2-8	A B	90°	Para	A1035	7.9 7.5	7.7	8380	13	0.625
44	5-8-90-4#3-i-3.5-2-8	A B	90°	Para	A1035	8.6 8.3	8.4	8380	13	0.625

Table A.6 Cont. Data and test results for specimens with No. 5 hooked bars

	Hook	R_r	b in.	h in.	h_{cl} in.	h_c in.	c_{so} in.	$c_{so,avg}$ in.	c_{th} in.	c_h in.	N_h	Axial Load kips	Long. Reinf. Layout[o]
21	A B	0.073	13.1	10.4	5.25	8.375	2.5 2.5	2.5	2.4 2.8	6.9	2	80	A1
22	A B	0.060	13.1	8.0	5.25	8.375	2.5 2.5	2.5	3.3 2.5	6.9	2	80	A1
23	A B	0.060	12.9	8.0	5.25	8.375	2.5 2.5	2.5	2.0 1.8	6.6	2	80	A1
24	A B	0.073	13.1	8.3	5.25	8.375	2.6 2.8	2.7	2.1 2.6	6.5	2	30	A1
25	A B	0.060	15.3	8.0	5.25	8.375	3.6 3.6	3.6	2.0 2.0	6.8	2	80	A1
26	A B	0.073	15.3	8.6	5.25	8.375	3.8 3.5	3.6	2.4 2.4	6.8	2	30	A1
27	A B	0.073	13.1	10.1	9.25	8.375	2.5 2.5	2.5	2.8 2.4	6.9	2	80	A1
28	A B	0.060	12.9	8.0	5.25	8.375	2.5 2.5	2.5	2.8 2.3	6.6	2	80	A1
29	A B	0.073	12.9	8.8	5.25	8.375	2.5 2.8	2.6	2.8 2.8	6.4	2	30	A1
30	A B	0.073	15.1	9.0	5.25	8.375	3.6 3.5	3.6	3.0 2.0	6.8	2	30	A1
31	A B	0.073	12.9	10.0	5.38	8.375	2.5 2.5	2.5	2.0 2.5	6.6	2	80	A1
32	A B	0.060	13.1	8.5	5.25	8.375	2.6 2.6	2.6	2.5 2.8	6.6	2	80	A1
33	A B	0.073	13.0	8.0	5.25	8.375	2.8 2.9	2.8	2.0 2.0	6.1	2	80	A1
34	A B	0.073	12.9	10.0	5.25	8.375	2.6 2.5	2.6	1.8 1.5	6.5	2	80	A5
35	A B	0.073	13.0	8.8	5.25	8.375	2.5 2.8	2.6	3.0 3.0	6.5	2	30	A1
36	A B	0.073	12.6	8.2	5.25	8.375	2.4 2.4	2.4	1.9 1.7	6.6	2	30	A2
37	A B	0.073	13.0	6.1	5.25	8.375	2.5 2.5	2.5	2.6 2.1	6.8	2	30	A9
38	A B	0.073	14.5	8.3	5.25	8.375	3.4 3.4	3.4	2.3 2.5	6.5	2	30	A1
39	A B	0.073	14.9	10.3	5.25	8.375	3.4 3.5	3.4	2.3 2.8	6.8	2	30	A1
40	A B	0.073	14.9	8.0	5.25	8.375	3.5 3.8	3.6	1.5 2.0	6.4	2	80	A1
41	A B	0.060	14.9	10.0	5.25	8.375	3.5 3.5	3.5	2.9 3.0	6.6	2	80	A5
42	A B	0.073	15.1	7.4	5.25	8.375	3.8 3.5	3.6	1.8 2.2	6.6	2	30	A1
43	A B	0.060	12.6	10.0	5.25	8.375	2.5 2.5	2.5	2.1 2.5	6.4	2	80	A5
44	A B	0.060 0.060	15.1	10.0	5.25 5.25	8.375 8.375	3.5 3.5	3.5 3.5	1.4 1.8	6.9 6.9	2 2	80	A5

[o] Longitudinal column configurations shown in Appendix A, Figures A1 – A16

Table A.7 Cont. Data and test results for specimens with No. 5 hooked bars

	Hook	T_{max} lb	T_{ind} lb	T_{total} lb	T lb	T_h lb	T/T_h	$f_{su,max}$ psi	f_{su} psi	$f_{su,avg}$ psi	Joint shear at failure/ $\sqrt{f_{cm}}$
21	A B	32860 37440	32628 33645	66273	33136	31349	1.06	106001 120776	106892	65062	4.7
22	A B	20038 29285	19968 19863	39830	19915	21933	0.91	64639 94469	64242	44607	3.5
23	A B	26203 27858	26172 26974	53146	26573	28174	0.94	84524 89865	85719	64347	3.9
24	A B	29328 25430	29328 25430	54758	27379	27780	0.99	94606 82032	88319	64750	3.7
25	A B	41369 31173	28996 31173	60169	30084	27859	1.08	133448 100558	97046	63996	3.7
26	A B	28967 26270	25617 26194	51811	25905	29307	0.88	93441 84741	83565	68475	2.9
27	A B	35739 27537	27537 27537	55074	27537	33925	0.81	115288 88829	88829	62980	4.0
28	A B	21633 26769	21535 21379	42914	21457	26892	0.80	69782 86352	69217	48118	3.8
29	A B	23854 27932	23854 24731	48585	24292	31688	0.77	76947 90103	78363	65783	3.1
30	A B	25266 25221	25261 25221	50482	25241	33887	0.74	81504 81359	81423	71214	2.7
31	A B	37932 38949	37807 36500	74307	37154	31904	1.16	122360 125642	119850	67802	5.3
32	A B	31846 29191	29697 29191	58888	29444	24732	1.19	102730 94164	94980	51134	4.8
33	A B	33454 30874	30402 30874	61277	30638	27755	1.10	107916 99595	98833	63517	4.4
34	A B	39822 40545	39791 40545	80336	40168	37614	1.07	128457 130789	129574	87619	4.8
35	A B	25201 29393	25120 23576	48696	24348	28463	0.86	81295 94816	78542	69203	2.8
36	A B	42381 42895	42381 42895	85276	42638	34250	1.24	136714 138371	137542	91580	4.6
37	A B	18652 21256	18652 18683	37334	18667	21220	0.88	60167 68569	60217	53871	2.6
38	A B	21341 21262	21146 21040	42186	21093	24118	0.87	68842 68586	68042	48557	3.4
39	A B	43675 45654	43675 45654	89329	44665	30822	1.45	140887 147271	144079	63551	5.7
40	A B	29930 30139	29930 30139	60069	30035	28807	1.04	96549 97223	96886	66163	3.8
41	A B	38022 28596	28716 28596	57312	28656	32368	0.89	122652 92246	92439	75329	2.9
42	A B	27860 28869	27860 28869	56728	28364	26634	1.06	89871 93124	91497	63404	3.4
43	A B	33367 27016	25867 26955	52823	26411	38991	0.68	107636 87150	85198	80426	3.2
44	A B	42471 39278	37810 39150	76960	38480 42600	42178 42601	0.91	137003 126704	124130	88273	3.9

Table A.8 Cont. Data and test results for specimens with No. 5 hooked bars

	Hook	Slip at Failure in.	Failure Type	f_{yt} ksi	d_{tr} in.	$A_{tr,l}$ in.^{2}	N_{tr}	s_{tr} in.	A_{cti} in.^{2}	N_{cti}	s_{cti} in.	d_s in.	s_s in.	d_{cto} in.	N_{cto}	A_s in.^{2}	f_{ys} ksi
21	A B	- -	F S/F	60	0.375	0.11	1	5.00	0.44	4	6.0	0.375	4.00	-	-	1.27	60
22	A B	- -	S S/F	60	0.375	0.11	1	5.00	0.44	4	6.0	0.375	4.00	-	-	1.27	60
23	A B	- -	F S	60	0.375	0.11	1	5.00	0.80	4	6.0	0.500	4.00	-	-	1.27	60
24	A B	- -	F/S F/S	60	0.375	0.11	1	6.00	0.66	6	3.0	0.500	3.00	-	-	1.27	60
25	A B	- -	F/S F/S	60	0.375	0.11	1	5.00	0.80	4	6.0	0.500	4.00	-	-	1.27	60
26	A B	0.239 0.158	F/S F/S	60	0.375	0.11	1	6.00	0.66	6	3.0	0.500	3.00	-	-	1.27	60
27	A B	- -	F/S S	60	0.5	0.20	1	5.00	0.44	4	6.0	0.375	4.00	-	-	1.27	60
28	A B	- -	S S	60	0.5	0.20	1	5.00	0.44	4	6.0	0.375	4.00	-	-	1.27	60
29	A B	0.25 0.22	F F/S	60	0.5	0.20	1	6.00	0.44	4	6.0	0.500	3.00	-	-	1.27	60
30	A B	- -	F/S F/S	60	0.5	0.20	1	6.00	0.44	4	6.0	0.500	3.00	-	-	1.27	60
31	A B	- -	S/F S/F	60	0.375	0.11	2	4.00	-	-	-	0.375	4.00	-	-	1.27	60
32	A B	- -	F/S F/S	60	0.375	0.11	2	4.00	-	-	-	0.375	4.00	-	-	1.27	60
33	A B	- -	F/S F/S	60	0.375	0.11	2	4.00	-	-	-	0.500	4.00	-	-	1.27	60
34	A B	- -	F/S F/S	60	0.375	0.11	2	4.00	-	-	-	0.500	4.00	-	-	1.67	60
35	A B	- -	F/S F	60	0.375	0.11	2	3.30	0.33	3	3.3	0.500	3.00	-	-	1.27	60
36	A B	- -	F F	60	0.375	0.11	2	3.00	-	-	-	0.375	2.75	-	-	3.16	60
37	A B	- -	F F	60	0.375	0.11	2	3.00	-	-	-	0.375	1.75	-	-	2.51	60
38	A B	0.183 -	S/F S/F	60	0.375	0.11	2	3.50	0.11	1	3.5	0.375	3.50	-	-	1.27	60
39	A B	- -	F F	60	0.375	0.11	2	3.50	-	-	-	0.375	4.00	-	-	1.27	60
40	A B	- -	F F/S	60	0.375	0.11	2	4.00	-	-	-	0.500	4.00	-	-	1.27	60
41	A B	- -	F F	60	0.375	0.11	2	4.00	-	-	-	0.500	4.00	-	-	1.67	60
42	A B	- 0.349	F F	60	0.375	0.11	2	3.33	0.33	3	3.3	0.500	3.00	-	-	1.27	60
43	A B	- -	F/S F/S	60	0.375	0.11	4	2.00	-	-	-	0.500	4.00	-	-	1.67	60
44	A B	- -	F S/F	60	0.375	0.11	4	2.00	-	-	-	0.50	4.00	-	-	1.67	60

Table A.9 Cont. Data and test results for specimens with No. 5 hooked bars

	Specimen	Hook	Bend Angle	Trans. Reinf. Orient.	Hook Bar Type	ℓ_{eh} in.	$\ell_{eh,avg}$ in.	f'_c psi	Age days	d_b in.
45	5-5-90-5#3-o-1.5-2-5	B	90°	Para	A615	5.0	5.0	5205	5	0.625
46	5-5-90-5#3-o-1.5-2-8	A B	90°	Para	A1035	8.0 7.8	7.9	5650	6	0.625
47	5-5-90-5#3-o-1.5-2-6.5	A B	90°	Para	A1035	6.5 6.5	6.5	5780	7	0.625
48	5-5-90-5#3-o-2.5-2-5	A B	90°	Para	A615	5.2 5.1	5.2	4903	4	0.625
49	5-5-90-5#3-o-2.5-2-8	A	90°	Para	A1035	7.5	7.5	5650	6	0.625
50	5-5-90-5#3-i-2.5-2-7	A B	90°	Para	A1035	5.6 7.0	6.3	5230	6	0.625
51	5-12-90-5#3-i-2.5-2-5	A B	90°	Para	A1035	5.1 5.8	5.4	10410	15	0.625
52	5-15-90-5#3-i-2.5-2-4	A B	90°	Para	A1035	3.8 4.1	4.0	15800	62	0.625
53	5-15-90-5#3-i-2.5-2-5	A B	90°	Para	A1035	5.0 5.1	5.1	15800	62	0.625
54	5-5-90-5#3-i-3.5-2-7	A B	90°	Para	A1035	7.5 6.8	7.1	5190	7	0.625
55	5-12-90-5#3-i-3.5-2-5	A B	90°	Para	A1035	5.3 4.8	5.0	11090	83	0.625

Table A.10 Cont. Data and test results for specimens with No. 5 hooked bars

	Hook	R_r	b in.	h in.	h_{cl} in.	h_c in.	c_{so} in.	$c_{so,avg}$ in.	c_{th} in.	c_h in.	N_h	Axial Load kips	Long. Reinf. Layout[o]
45	B	0.077	10.8	7.1	5.25	8.375	1.5	1.5	2.0	6.5	2	80	A1
46	A B	0.077	10.7	10.3	5.25	8.375	1.6 1.5	1.5	2.3 2.6	6.4	2	80	A1
47	A B	0.073	10.9	8.5	5.25	8.375	1.6 1.6	1.6	2.0 2.0	6.5	2	80	A4
48	A B	0.077	13.1	7.0	5.38	8.375	2.6 2.6	2.6	1.9 1.9	6.6	2	80	A1
49	A	0.077	13.1	10.4	5.25	8.375	2.6	2.6	2.1	6.5	2	80	A1
50	A B	0.073	13.3	9.3	5.25	8.375	2.8 2.8	2.8	3.6 2.3	6.5	2	30	A1
51	A B	0.073	13.0	7.3	5.25	8.375	2.6 2.6	2.6	2.1 1.5	6.5	2	30	A1
52	A B	0.073	12.8	6.0	5.25	8.375	2.4 2.5	2.4	2.2 1.9	6.6	2	30	A9
53	A B	0.073	12.8	7.1	5.25	8.375	2.4 2.3	2.4	2.1 1.9	6.8	2	30	A2
54	A B	0.073	15.1	9.5	5.25	8.375	3.4 3.5	3.4	2.0 2.8	7.0	2	30	A1
55	A B	0.073	14.4	7.0	5.25	8.375	3.3 3.3	3.3	2.5 1.5	6.6	2	30	A1

[o] Longitudinal column configurations shown in Appendix A, Figures A1 – A16

Table A.11 Cont. Data and test results for specimens with No. 5 hooked bars

	Hook	T_{max} lb	T_{ind} lb	T_{total} lb	T lb	T_h lb	T/T_h	$f_{su,max}$ psi	f_{su} psi	$f_{su,avg}$ psi	Joint shear at failure/ $\sqrt{f_{cm}}$
45	B	22060	22060	22060	22060	25225	0.74	71000	71000	51500	2.8
46	A B	25173 30446	25173 25048	50221	25110	40815	0.62	81202 98211	81002	84562	4.2
47	A B	26229 20940	22736 20686	43422	21711	35791	0.61	84610 67550	70035	70596	4.3
48	A B	22279 29466	22230 22829	45058	22529	29921	0.75	71868 95050	72675	51578	4.9
49	A	28429	28429	28429	28429	39398	0.72	91706	91706	80536	1.9
50	A B	32080 31340	32080 31313	63393	31696	34446	0.92	103484 101095	102246	65216	5.0
51	A B	33923 34916	33923 34916	68839	34420	35366	0.97	109428 112634	111031	79255	5.0
52	A B	31312 31325	31312 31325	62637	31318	31021	1.01	101006 101048	101027	71266	4.5
53	A B	38574 46165	38574 39737	78312	39156	36416	1.08	124434 148921	126309	90907	4.8
54	A B	44301 35206	36844 35206	72050	36025	37369	0.96	142906 113568	116210	73328	4.9
55	A B	31472 31302	31396 29485	60882	30441	33822	0.90	101522 100973	98196	75221	4.0

Table A.12 Cont. Data and test results for specimens with No. 5 hooked bars

	Hook	Slip at Failure in.	Failure Type	f_{yt} ksi	d_{tr} in.	$A_{tr,l}$ in.^{2}	N_{tr}	s_{tr} in.	A_{cti} in.^{2}	N_{cti}	s_{cti} in.	d_s in.	s_s in.	d_{cto} in.	N_{cto}	A_s in.^{2}	f_{ys} ksi
45	B	-	F/S	60	0.375	0.11	5	2.00	-	-	-	0.375	2.50	-	-	1.27	60
46	A B	- -	F/S F/S	60	0.375	0.11	5	2.50	-	-	-	0.375	2.50	-	-	1.27	60
47	A B	- -	F/S F/S	60	0.375	0.11	5	2.50	-	-	-	0.375	2.50	-	-	1.89	60
48	A B	- -	F/S F/S	60	0.375	0.11	5	2.00	-	-	-	0.375	2.50	-	-	1.27	60
49	A	-	F	60	0.375	0.11	5	2.50	-	-	-	0.375	2.50	-	-	1.27	60
50	A B	- -	F F/S	60	0.375	0.11	5	1.75	-	-	-	0.500	3.50	-	-	1.27	60
51	A B	0.292 0.295	F/S S/F	60	0.375	0.11	5	1.67	-	-	-	0.500	3.00	-	-	1.27	60
52	A B	0.603 0.378	F F	60	0.375	0.11	5	1.75	-	-	-	0.375	1.75	-	-	2.51	60
53	A B	- -	F BY	60	0.375	0.11	5	1.75	-	-	-	0.375	2.25	-	-	3.16	60
54	A B	- -	F F	60	0.375	0.11	5	1.75	-	-	-	0.500	3.50	-	-	1.27	60
55	A B	- -	F F	60	0.375	0.11	5	1.70	-	-	-	0.500	3.00	-	-	1.27	60

Table A.2 Data and test results for specimens with No. 8 hooked bars

	Specimen	Hook	Bend Angle	Trans. Reinf. Orient.	Hook Bar Type	ℓ_{eh} in.	$\ell_{eh,avg}$ in.	f'_c psi	Age days	d_b in.
56	8-5-90-0-o-2.5-2-10a	A B	90°	Para	A1035[a]	10.3 10.5	10.4	5270	7	1
57	8-5-90-0-o-2.5-2-10b	A B	90°	Para	A1035[a]	9.3 10.3	9.8	5440	8	1
58	8-5-90-0-o-2.5-2-10c	A B	90°	Para	A1035[a]	10.8 10.5	10.6	5650	9	1
59	8-8-90-0-o-2.5-2-8	A B	90°	Para	A1035[b]	8.6 8.3	8.4	8740	12	1
60	8-8-90-0-o-3.5-2-8	A B	90°	Para	A1035[b]	7.6 8.0	7.8	8810	14	1
61	8-8-90-0-o-4-2-8	A B	90°	Para	A1035[b]	8.1 8.3	8.2	8630	11	1
62	8-5-90-0-i-2.5-2-16	A B	90°	Para	A1035[b]	16.0 16.8	16.4	4980	7	1
63	8-5-90-0-i-2.5-2-9.5	A B	90°	Para	A615	9.0 10.3	9.6	5140	8	1
64	8-5-90-0-i-2.5-2-12.5	A B	90°	Para	A615	13.3 13.3	13.3	5240	9	1
65	8-5-90-0-i-2.5-2-18	A B	90°	Para	A1035[b]	19.5 17.9	18.7	5380	11	1
66	8-5-90-0-i-2.5-2-13	A B	90°	Para	A1035[b]	13.3 13.5	13.4	5560	11	1
67	8-5-90-0-i-2.5-2-15(1)	A B	90°	Para	A1035[b]	14.5 15.3	14.9	5910	14	1
68	8-5-90-0-i-2.5-2-15	A B	90°	Para	A1035[b]	15.3 14.4	14.8	6210	8	1
69	8-8-90-0-i-2.5-2-8	A B	90°	Para	A1035[b]	8.9 8.0	8.4	7910	15	1
70	8-8-90-0-i-2.5-2-10	A B	90°	Para	A1035[b]	9.8 9.5	9.6	7700	14	1
71	8-8-90-0-i-2.5-2-8(1)	A B	90°	Para	A1035[b]	8.0 8.0	8.0	8780	13	1
72	8-8-90-0-i-2.5sc-2tc-9[‡]	A B	90°	Para	A615	9.5 9.5	9.5	7710	25	1
73	8-12-90-0-i-2.5-2-9	A B	90°	Para	A1035[b]	9.0 9.0	9.0	11160	77	1
74	8-12-90-0-i-2.5-2-12.5	A B	90°	Para	A1035[c]	12.9 12.8	12.8	11850	39	1
75	8-12-90-0-i-2.5-2-12	A B	90°	Para	A1035[c]	12.1 12.1	12.1	11760	34	1
76	8-15-90-0-i-2.5-2-8.5	A B	90°	Para	A1035[c]	8.8 8.9	8.8	15800	61	1
77	8-15-90-0-i-2.5-2-13	A B	90°	Para	A1035[c]	12.8 12.8	12.8	15800	61	1
78	8-5-90-0-i-3.5-2-18	A B	90°	Para	A1035[b]	19.0 18.0	18.5	5380	11	1
79	8-5-90-0-i-3.5-2-13	A B	90°	Para	A1035[b]	13.4 13.4	13.4	5560	11	1

[‡] Specimen contained A1035 Grade 120 for column longitudinal steel
[a] Heat 1, [b] Heat 2, [c] Heat 3 as described in Table 2

Table A.2 Cont. Data and test results for specimens with No. 8 hooked bars

	Hook	R_r	b in.	h in.	h_{cl} in.	h_c in.	c_{so} in.	$c_{so,avg}$ in.	c_{th} in.	c_h in.	N_h	Axial Load kips	Long. Reinf. Layout[o]
56	A B	0.084	17.1	12.3	10.5	8.375	2.5 2.6	2.6	2.0 1.8	10.0	2	80	A2
57	A B	0.084	17.0	12.5	10.5	8.375	2.5 2.5	2.5	3.3 2.3	10.0	2	80	A2
58	A B	0.084	17.0	12.3	10.5	8.375	2.5 2.5	2.5	1.5 1.8	10.0	2	80	A2
59	A B	0.078	16.3	10.4	10.5	8.375	2.8 2.5	2.6	1.8 2.1	9.0	2	30	A2
60	A B	0.078	18.9	10.0	10.5	8.375	3.5 3.6	3.6	2.4 2.0	9.8	2	30	A2
61	A B	0.078	20.0	10.6	10.5	8.375	4.5 3.8	4.1	2.5 2.4	9.8	2	30	A2
62	A B	0.078	17.0	17.9	10.5	8.375	2.8 2.8	2.8	1.8 1.4	9.5	2	80	A2
63	A B	0.078	16.8	12.0	10.5	8.375	2.8 2.5	2.6	3.0 1.8	9.5	2	80	A2
64	A B	0.078	17.3	14.5	10.5	8.375	2.8 2.8	2.8	1.3 1.3	9.8	2	80	A2
65	A B	0.078	17.5	20.3	10.5	8.375	2.5 2.5	2.5	0.8 2.4	10.5	2	30	A6
66	A B	0.078	16.8	15.3	10.5	8.375	2.5 2.5	2.5	2.0 1.8	9.8	2	30	A2
67	A B	0.073	16.7	17.3	10.5	8.375	2.5 2.6	2.5	2.8 2.0	9.6	2	30	A2
68	A B	0.073	16.6	17.3	10.5	8.375	2.5 2.6	2.6	2.0 2.9	9.5	2	30	A2
69	A B	0.078	16.3	10.0	10.5	8.375	2.8 2.9	2.8	1.1 2.0	8.6	2	30	A2
70	A B	0.078	16.6	12.0	10.5	8.375	2.8 2.9	2.8	2.3 2.5	9.0	2	30	A2
71	A B	0.078	17.0	10.8	10.5	8.375	2.8 2.8	2.8	2.8 2.8	9.5	2	30	A2
72	A B	0.073	17.3	11.0	10.5	8.375	2.5 2.8	2.6	1.5 1.5	10.0	2	30	A2
73	A B	0.078	17.0	11.4	10.5	8.375	2.8 2.6	2.7	2.4 2.4	9.6	2	30	A2
74	A B	0.073	17.4	14.6	10.5	8.375	2.6 2.6	2.6	1.7 1.8	10.1	2	30	A2
75	A B	0.073	16.8	14.0	10.5	8.375	2.5 2.4	2.5	1.9 1.9	9.8	2	30	A2
76	A B	0.073	17.0	10.8	10.5	8.375	2.5 2.5	2.5	2.0 1.9	10.0	2	30	A6
77	A B	0.073	16.8	14.8	10.5	8.375	2.4 2.5	2.4	2.1 2.0	9.9	2	30	A7
78	A B	0.078	18.5	20.4	10.5	8.375	3.8 3.4	3.6	1.4 2.4	9.4	2	30	A6
79	A B	0.078	18.4	15.3	10.5	8.375	3.6 3.4	3.5	1.9 1.9	9.4	2	30	A2

[o] Longitudinal column configurations shown in Appendix A, Figures A1 – A16

Table A.2 Cont. Data and test results for specimens with No. 8 hooked bars

	Hook	T_{max} lb	T_{ind} lb	T_{total} lb	T lb	T_h lb	T/T_h	$f_{su,max}$ psi	f_{su} psi	$f_{s,ACI}$ psi	Joint shear at failure/ $\sqrt{f_{cm}}$
56	A B	40645 46612	38970 45658	84628	42314	47578	0.89	51449 59003	53562	53798	3.4
57	A B	47870 30599	38190 29112	67302	33651	44958	0.75	60596 38733	42596	51366	2.6
58	A B	62682 54558	57437 54512	111949	55975	49790	1.12	79345 69061	70854	57046	4.3
59	A B	44396 33238	32792 33238	66029	33015	44255	0.75	56198 42073	41791	56343	2.5
60	A B	35613 44488	35613 36132	71745	35872	40883	0.88	45080 56314	45408	52378	2.5
61	A B	37130 39173	35849 39173	75022	37511	42709	0.88	47000 49586	47482	54329	2.3
62	A B	83310 86063	83310 83169	166479	83239	75922	1.10	105455 108940	105366	82541	4.7
63	A B	44627 65800	44627 44344	88971	44485	43624	1.02	56489 83291	56311	49289	3.7
64	A B	65254 69872	65254 66385	131639	65819	61559	1.07	82600 88446	83316	68510	4.4
65	A B	100169 79805	82023 79740	161763	80881	89312	0.91	126796 101018	102381	97907	3.8
66	A B	73143 65197	65881 65197	131078	65539	63253	1.04	92586 82527	82960	71237	4.2
67	A B	64532 87275	64532 63002	127534	63767	72061	0.88	81686 110475	80718	81681	3.5
68	A B	76256 80724	76162 74793	150955	75478	72778	1.04	96527 102182	95541	83377	4.0
69	A B	54674 45169	45317 45169	90486	45243	42993	1.05	69208 57176	57269	53601	3.8
70	A B	50000 52926	49985 52926	102911	51455	49048	1.05	63291 66995	65134	60328	3.6
71	A B	38047 37660	35988 37654	73642	36821	41882	0.88	48161 47671	46609	53544	2.6
72	A B	35543 34656	35543 34656	70199	35100	48392	0.73	44991 43868	44430	59583	2.6
73	A B	50809 54796	50677 49168	99845	49923	50870	0.98	64315 69362	63193	67912	3.0
74	A B	66009 77378	65995 67878	133873	66937	75268	0.89	83555 97947	84730	99624	2.9
75	A B	70689 65778	65980 65778	131758	65879	70837	0.93	89479 83263	83391	93920	3.1
76	A B	43063 44087	43063 44087	87150	43575	55024	0.79	54510 55807	55158	79122	2.3
77	A B	77232 79007	77232 79007	156239	78120	81605	0.96	97762 100009	98885	114756	3.0
78	A B	96026 105140	96026 94717	190743	95372	88362	1.08	121552 133089	120724	96925	4.2
79	A B	69449 68307	67892 68307	136199	68099	63253	1.08	87910 86464	86202	71237	3.9

Table A.2 Cont. Data and test results for specimens with No. 8 hooked bars

	Hook	Slip at Failure in.	Failure Type	f_{yt} ksi	d_{tr} in.	$A_{tr,l}$ in.^{2}	N_{tr}	s_{tr} in.	A_{cti} in.^{2}	N_{cti}	s_{cti} in.	d_s in.	s_s in.	d_{cto} in.	N_{cto}	A_s in.^{2}	f_{ys} ksi
56	A B	- 0.186	F/S S/F	60	-	-	-	-	3.10	5	3.5	0.63	3.50	-	-	3.16	60
57	A B	- -	F/S S/F	60	-	-	-	-	3.10	5	3.5	0.63	3.50	-	-	3.16	60
58	A B	- 0.132	F/S S/F/TK	60	-	-	-	-	3.10	5	3.5	0.63	3.50	-	-	3.16	60
59	A B	0.153 0.113	S/TK S/TK	60	-	-	-	-	2.00	10	3.0	0.50	1.75	-	-	3.16	60
60	A B	- -	F/S S/F	60	-	-	-	-	2.00	10	3.0	0.50	1.75	-	-	3.16	60
61	A B	0.362 .(0.017)	S/F S	60	-	-	-	-	2.00	10	3.0	0.50	1.75	-	-	3.16	60
62	A B	- -	F/S F/TK	60	-	-	-	-	2.00	10	3.0	0.50	3.00	-	-	3.16	60
63	A B	- -	F S	60	-	-	-	-	2.00	10	3.0	0.50	3.00	-	-	3.16	60
64	A B	- -	S/F S	60	-	-	-	-	2.00	10	3.0	0.50	3.00	-	-	3.16	60
65	A B	- 0.153	F/S/TK F/S/TK	60	-	-	-	-	1.10	10	3.0	0.38	3.50	0.375	1	3.78	60
66	A B	- -	S F/S	60	-	-	-	-	1.00	5	3.0	0.50	3.00	0.375	1	3.16	60
67	A B	- -	F/S S	60	-	-	-	-	1.10	10	3.0	0.38	3.50	0.375	2	3.16	60
68	A B		S/F S/F	60	-	-	-	-	1.10	10	3.0	0.38	3.50	0.375	2	3.16	60
69	A B	- -	F/TK F/S	60	-	-	-	-	1.60	8	4.0	0.50	1.75	-	-	3.16	60
70	A B	0.195 0.185	F F	60	-	-	-	-	1.60	8	4.0	0.63	3.50	-	-	3.16	60
71	A B	0.387 0.229	F/S F/S	60	-	-	-	-	1.60	8	4.0	0.50	1.50	-	-	3.16	60
72	A B	0.104 0	F F	60	-	-	-	-	-	-	-	0.38	4.00	-	-	3.16	60
73	A B	0.219	F/S S/F	60	-	-	-	-	0.88	8	4.0	0.50	4.00	0.375	2	3.16	60
74	A B	0.295 0.266	F/S F/S	60	-	-	-	-	-	-	-	0.50	2.25	-	-	3.16	60
75	A B	- 0.0119	S/F F/S	60	-	-	-	-	-	-	-	0.38	4.00	-	-	3.16	60
76	A B	- -	F F	60	-	-	-	-	-	-	-	0.38	4.00	-	-	3.78	60
77	A B	- -	F/S F	60	-	-	-	-	-	-	-	0.38	5.00	-	-	4.74	60
78	A B	0.181 -	F/S/TK F/S	60	-	-	-	-	1.10	10	3.0	0.38	3.50	0.375	1	3.78	60
79	A B	- -	F/S S/F	60	-	-	-	-	1.00	5	3.0	0.50	3.00	0.375	1	3.16	60

Table A.2 Cont. Data and test results for specimens with No. 8 hooked bars

	Specimen	Hook	Bend Angle	Trans. Reinf. Orient.	Hook Bar Type	ℓ_{eh} in.	$\ell_{eh,avg}$ in.	f'_c psi	Age days	d_b in.
80	8-5-90-0-i-3.5-2-15(2)	A B	90°	Para	A1035[c]	15.6 14.9	15.3	5180	8	1
81	8-5-90-0-i-3.5-2-15(1)	A B	90°	Para	A1035[c]	15.4 15.1	15.3	6440	9	1
82	8-8-90-0-i-3.5-2-8(1)	A B	90°	Para	A1035[b]	7.8 7.8	7.8	7910	15	1
83	8-8-90-0-i-3.5-2-10	A B	90°	Para	A1035[b]	8.8 10.8	9.8	7700	14	1
84	8-8-90-0-i-3.5-2-8(2)	A B	90°	Para	A1035[b]	8.5 8.0	8.3	8780	13	1
85	8-12-90-0-i-3.5-2-9	A B	90°	Para	A1035[b]	9.0 9.0	9.0	11160	77	1
86	8-8-90-0-i-4-2-8	A B	90°	Para	A1035[b]	7.6 8.0	7.8	8740	12	1
87	8-5-90-1#3-i-2.5-2-16	A B	90°	Para	A1035[b]	15.6 15.6	15.6	4810	6	1
88	8-5-90-1#3-i-2.5-2-12.5	A B	90°	Para	A1035[b]	12.5 12.5	12.5	5140	8	1
89	8-5-90-1#3-i-2.5-2-9.5	A B	90°	Para	A615	9.0 9.0	9.0	5240	9	1
90	8-5-90-2#3-i-2.5-2-16	A B	90°	Para	A1035[b]	15.0 15.8	15.4	4810	6	1
91	8-5-90-2#3-i-2.5-2-9.5	A B	90°	Para	A615	9.0 9.3	9.1	5140	8	1
92	8-5-90-2#3-i-2.5-2-12.5	A B	90°	Para	A615	12.0 12.0	12.0	5240	9	1
93	8-5-90-2#3-i-2.5-2-8.5	A B	90°	Para	A1035[c]	8.9 9.6	9.3	5240	6	1
94	8-5-90-2#3-i-2.5-2-14	A B	90°	Para	A1035[c]	13.5 14.0	13.8	5450	7	1
95	8-8-90-2#3-i-2.5-2-8	A B	90°	Para	A1035[b]	8.0 8.5	8.3	7700	14	1
96	8-8-90-2#3-i-2.5-2-10	A B	90°	Para	A1035[b]	9.9 9.5	9.7	8990	17	1
97	8-12-90-2#3-i-2.5-2-9	A B	90°	Para	A1035[b]	9.0 9.0	9.0	11160	77	1
98	8-12-90-2#3-i-2.5-2-11	A B	90°	Para	A1035[c]	10.5 11.3	10.9	12010	42	1
99	8-12-90-2#3vr-i-2.5-2-11	A B	90°	Perp	A1035[c]	10.9 10.4	10.6	12010	42	1
100	8-15-90-2#3-i-2.5-2-6	A B	90°	Para	A1035[c]	5.8 6.4	6.1	15800	61	1
101	8-15-90-2#3-i-2.5-2-11	A B	90°	Para	A1035[c]	11.3 10.8	11.0	15800	61	1
102	8-5-90-2#3-i-3.5-2-17	A B	90°	Para	A1035[b]	17.5 17.0	17.3	5570	12	1
103	8-5-90-2#3-i-3.5-2-13	A B	90°	Para	A1035[b]	13.8 13.5	13.6	5560	11	1

[a] Heat 1, [b] Heat 2, [c] Heat 3 as described in Table 2

Table A.2 Cont. Data and test results for specimens with No. 8 hooked bars

	Hook	R_r	b in.	h in.	h_{cl} in.	h_c in.	c_{so} in.	$c_{so,avg}$ in.	c_{th} in.	c_h in.	N_h	Axial Load kips	Long. Reinf. Layout[o]
80	A B	0.073	18.5	17.3	10.5	8.375	3.5 3.5	3.5	1.6 2.4	9.5	2	30	A2
81	A B	0.073	18.8	17.1	10.5	8.375	3.3 3.4	3.3	1.8 2.0	10.1	2	30	A2
82	A B	0.078	18.3	10.0	10.5	8.375	3.5 3.8	3.6	2.3 2.3	9.0	2	30	A2
83	A B	0.078	18.5	12.0	10.5	8.375	3.8 3.8	3.8	3.3 1.3	9.0	2	30	A2
84	A B	0.078	19.4	10.6	10.5	8.375	3.6 3.8	3.7	2.1 2.6	10.0	2	30	A2
85	A B	0.078	19.0	11.3	10.5	8.375	3.5 3.8	3.6	2.4 2.1	9.8	2	30	A2
86	A B	0.078	19.9	10.5	10.5	8.375	4.5 3.9	4.2	2.9 2.5	9.5	2	30	A2
87	A B	0.078	17.3	17.9	10.5	8.375	2.8 3.0	2.9	2.3 2.3	9.5	2	80	A2
88	A B	0.078	17.1	14.6	10.5	8.375	2.6 2.8	2.7	2.1 2.1	9.8	2	80	A2
89	A B	0.078	17.1	11.5	10.5	8.375	2.6 2.8	2.7	2.5 2.5	9.8	2	80	A2
90	A B	0.078	17.1	17.9	10.5	8.375	2.8 2.9	2.8	2.9 2.1	9.5	2	80	A2
91	A B	0.078	17.0	11.6	10.5	8.375	2.5 2.5	2.5	2.6 2.3	10.0	2	80	A2
92	A B	0.078	17.0	14.6	10.5	8.375	2.8 2.8	2.8	2.6 2.6	9.5	2	80	A2
93	A B	0.073	17.1	10.7	10.5	8.375	3.0 3.0	3.0	1.8 1.1	9.1	2	30	A2
94	A B	0.073	17.0	16.1	10.5	8.375	2.8 3.0	2.9	2.6 2.1	9.3	2	30	A2
95	A B	0.078	16.9	10.0	10.5	8.375	3.0 2.9	2.9	2.0 1.5	9.0	2	30	A2
96	A B	0.078	16.0	12.0	10.5	8.375	2.8 2.8	2.8	2.1 2.5	8.5	2	30	A2
97	A B	0.078	17.0	11.3	10.5	8.375	2.9 2.6	2.8	2.3 2.3	9.5	2	30	A2
98	A B	0.073	17.0	12.9	10.5	8.375	2.8 2.8	2.8	2.4 1.6	9.5	2	30	A2
99	A B	0.073	16.5	13.0	10.5	8.375	2.5 2.3	2.4	2.1 2.6	9.8	2	30	A2
100	A B	0.073	16.8	8.1	10.5	8.375	2.5 2.4	2.4	2.3 1.8	9.9	2	30	A11
101	A B	0.073	17.0	13.1	10.5	8.375	2.5 2.5	2.5	1.9 2.4	10.0	2	30	A11
102	A B	0.078	18.9	19.3	10.5	8.375	3.3 3.5	3.4	1.8 2.3	10.1	2	30	A2
103	A B	0.078	19.0	15.3	10.5	8.375	3.1 3.6	3.4	1.5 1.8	10.3	2	30	A2

[o] Longitudinal column configurations shown in Appendix A, Figures A1 – A16

Table A.2 Cont. Data and test results for specimens with No. 8 hooked bars

	Hook	T_{max} lb	T_{ind} lb	T_{total} lb	T lb	T_h lb	T/T_h	$f_{su,max}$ psi	f_{su} psi	$f_{s,ACI}$ psi	Joint shear at failure/ $\sqrt{f_{cm}}$
80	A B	106184 85459	89959 85459	175417	87709	71213	1.23	134410 108176	111024	78398	4.6
81	A B	71216 79405	70412 70890	141302	70651	75854	0.93	90146 100512	89432	87415	3.3
82	A B	43697 43993	43697 43993	87690	43845	39289	1.12	55313 55687	55500	49234	3.3
83	A B	55230 71880	55088 56046	111134	55567	49724	1.12	69911 90987	70338	61111	3.5
84	A B	41170 42930	41170 42899	84069	42034	43271	0.97	52114 54341	53208	55217	2.6
85	A B	61380 68385	61380 59097	120477	60238	50870	1.18	77696 86563	76251	67912	3.2
86	A B	37554 48708	37554 37309	74863	37431	40788	0.92	47537 61656	47381	52170	2.3
87	A B	94588 73936	75682 73936	149617	74809	76769	0.97	119731 93589	94694	77429	4.2
88	A B	73919 64783	64891 64783	129674	64837	62777	1.03	93569 82004	82072	64012	4.4
89	A B	62525 65289	59716 64750	124467	62233	46082	1.35	79145 82645	78776	46535	5.3
90	A B	80014 92780	79629 79629	159258	79629	75532	1.05	101284 117443	100796	76166	4.5
91	A B	54916 53621	53621 53621	107242	53621	46453	1.15	69513 67874	67874	46729	4.6
92	A B	74108 76334	67801 76334	144135	72067	60649	1.19	93808 96625	91225	62047	4.9
93	A B	52863 48439	52862 48260	101122	50561	47286	1.07	66915 61315	64001	47828	4.6
94	A B	76959 77540	76388 77540	153927	76964	69985	1.10	97416 98151	97422	72506	4.6
95	A B	46211 55377	46211 49540	95751	47876	46882	1.02	58495 70098	60602	51710	3.9
96	A B	60670 67001	60670 61378	122047	61024	56882	1.07	76797 84812	77245	65609	4.1
97	A B	61813 60251	61813 60213	122026	61013	56097	1.09	78244 76267	77232	67912	3.7
98	A B	68128 79794	68101 69264	137365	68683	68734	1.00	86237 101004	86940	85128	3.5
99	A B	50709 66830	50709 54637	105346	52673	64971	0.81	64188 84595	66674	83171	2.7
100	A B	37450 37689	37450 37689	75138	37569	42443	0.89	47405 47707	47556	54712	2.7
101	A B	99011 83603	83072 83567	166640	83320	74830	1.11	125330 105827	105468	98763	3.6
102	A B	102613 88572	91402 88426	179829	89914	88104	1.02	129889 112117	113816	91958	4.0
103	A B	81199 86858	81199 79522	160720	80360	69734	1.15	102783 109946	101722	72568	4.5

Table A.2 Cont. Data and test results for specimens with No. 8 hooked bars

	Hook	Slip at Failure in.	Failure Type	f_{yt} ksi	d_{tr} in.	$A_{tr,l}$ in.^{2}	N_{tr}	s_{tr} in.	A_{cti} in.^{2}	N_{cti}	s_{cti} in.	d_s in.	s_s in.	d_{cto} in.	N_{cto}	A_s in.^{2}	f_{ys} ksi
80	A B	- -	S S/F	60	-	-	-	-	1.10	10	3.0	0.38	3.50	0.375	2	3.16	60
81	A B		S/F S	60	-	-	-	-	1.10	10	3.0	0.38	3.50	0.375	2	3.16	60
82	A B	0.144 0.156	S/F S/F	60	-	-	-	-	1.60	8	4.0	0.50	1.75	-	-	3.16	60
83	A B	0.195 0.242	F/S S/F	60	-	-	-	-	1.60	8	4.0	0.63	3.50	-	-	3.16	60
84	A B	0.133 0.201	F F	60	-	-	-	-	1.60	8	4.0	0.50	1.50	-	-	3.16	60
85	A B	 0.434	F F/S	60	-	-	-	-	0.88	8	4.0	0.50	4.00	0.375	2	3.16	60
86	A B	- -	F/S F	60	-	-	-	-	1.60	8	4.0	0.50	1.75	-	-	3.16	60
87	A B	- -	F/S F/S	60	0.38	0.11	1	9.00	2.00	10	3.0	0.50	3.00	-	-	3.16	60
88	A B	- -	F/S S/F	60	0.38	0.11	1	9.00	2.00	10	3.0	0.50	3.00	-	-	3.16	60
89	A B	- -	S F/S	60	0.38	0.11	1	9.00	2.00	10	3.0	0.50	3.00	-	-	3.16	60
90	A B	- -	S/F F	60	0.38	0.11	2	3.00	2.00	10	3.0	0.50	3.00	-	-	3.16	60
91	A B	- -	F F	60	0.38	0.11	2	3.00	2.00	10	3.0	0.50	3.00	-	-	3.16	60
92	A B	- -	F F/S	60	0.38	0.11	2	3.00	2.00	10	3.0	0.50	3.00	-	-	3.16	60
93	A B		F/S S	60	0.38	0.11	2	7.50	2.00	10	2.5	0.50	3.25	0.5	1	3.16	60
94	A B		S/F F/S	60	0.38	0.11	2	6.00	0.88	8	3.0	0.50	3.50	0.5	1	3.16	60
95	A B	- -	F/S F/S	60	0.38	0.11	2	7.13	1.20	6	4.0	0.50	1.50	-	-	3.16	60
96	A B	0.186 0.152	F F	60	0.38	0.11	2	7.13	1.20	6	4.0	0.63	3.50	-	-	3.16	60
97	A B	0.345 0.361	F/S S/F	60	0.38	0.11	2	8.00	0.88	8	4.0	0.50	4.00	0.375	2	3.16	60
98	A B	0.181 0.165	F F	60	0.38	0.11	2	8.00	-	-	-	0.50	2.00	-	-	3.16	60
99	A B	- 0.13	F/S F	60	0.38	0.11	2	2.67	-	-	-	0.50	2.00	-	-	3.16	60
100	A B	- -	F F	60	0.38	0.11	2	6.00	-	-	-	0.38	2.75	-	-	6.32	60
101	A B	- 0.123	F F	60	0.38	0.11	2	5.50	-	-	-	0.38	4.00	-	-	6.32	60
102	A B	- -	S S/F	60	0.38	0.11	2	8.00	0.80	4	4.0	0.50	4.00	0.375	1	3.16	60
103	A B	- -	S/F S/F	60	0.38	0.11	2	8.00	0.44	4	4.0	0.50	3.00	-	-	3.16	60

Table A.2 Cont. Data and test results for specimens with No. 8 hooked bars

	Specimen	Hook	Bend Angle	Trans. Reinf. Orient.	Hook Bar Type	ℓ_{eh} in.	$\ell_{eh,avg}$ in.	f'_c psi	Age days	d_b in.
104	8-8-90-2#3-i-3.5-2-8	A B	90°	Para	A1035[b]	8.0 8.1	8.1	8290	16	1
105	8-8-90-2#3-i-3.5-2-10	A B	90°	Para	A1035[b]	8.8 8.8	8.8	8990	17	1
106	8-12-90-2#3-i-3.5-2-9	A B	90°	Para	A1035[b]	9.0 9.0	9.0	11160	77	1
107	8-8-90-2#4-i-2.5-2-10	A B	90°	Para	A1035[b]	8.5 9.3	8.9	8290	16	1
108	8-8-90-2#4-i-3.5-2-10	A B	90°	Para	A1035[b]	9.0 9.8	9.4	8290	16	1
109	8-5-90-4#3-i-2.5-2-16	B A	90°	Para	A1035[b]	16.0 16.3	16.1	4810	6	1
110	8-5-90-4#3-i-2.5-2-12.5	A B	90°	Para	A1035[b]	11.9 11.9	11.9	4980	7	1
111	8-5-90-4#3-i-2.5-2-9.5	A B	90°	Para	A615	9.5 9.5	9.5	5140	8	1
112	8-5-90-5#3-o-2.5-2-10a	A B	90°	Para	A1035[a]	10.3 10.5	10.4	5270	7	1
113	8-5-90-5#3-o-2.5-2-10b	A B	90°	Para	A1035[a]	10.5 10.5	10.5	5440	8	1
114	8-5-90-5#3-o-2.5-2-10c	A B	90°	Para	A1035[a]	11.3 10.5	10.9	5650	9	1
115	8-8-90-5#3-o-2.5-2-8	A B	90°	Para	A1035[b]	8.3 8.8	8.5	8630	11	1
116	8-8-90-5#3-o-3.5-2-8	A B	90°	Para	A1035[b]	7.8 8.0	7.9	8810	14	1
117	8-8-90-5#3-o-4-2-8	A B	90°	Para	A1035[b]	8.5 8.0	8.3	8740	12	1
118	8-5-90-5#3-i-2.5-2-10b	A B	90°	Para	A1035[a]	10.3 10.5	10.4	5440	8	1
119	8-5-90-5#3-i-2.5-2-10c	A B	90°	Para	A1035[a]	10.5 10.5	10.5	5650	9	1
120	8-5-90-5#3-i-2.5-2-15	A B	90°	Para	A1035[b]	15.3 15.8	15.5	4850	7	1
121	8-5-90-5#3-i-2.5-2-13	A B	90°	Para	A1035[b]	13.8 13.5	13.6	5560	11	1
122	8-5-90-5#3-i-2.5-2-12(1)	A B	90°	Para	A1035[c]	11.5 11.1	11.3	5090	7	1
123	8-5-90-5#3-i-2.5-2-12	A B	90°	Para	A1035[c]	11.3 12.3	11.8	5960	7	1
124	8-5-90-5#3-i-2.5-2-12(2)	A B	90°	Para	A1035[c]	12.4 12.0	12.2	5240	6	1
125	8-5-90-5#3-i-2.5-2-8	A B	90°	Para	A1035[c]	7.8 7.4	7.6	5240	6	1
126	8-5-90-5#3-i-2.5-2-10a	B	90°	Para	A1035[a]	10.5	10.5	5270	7	1
127	8-8-90-5#3-i-2.5-2-8	A B	90°	Para	A1035[b]	7.3 7.3	7.3	8290	16	1

[a] Heat 1, [b] Heat 2, [c] Heat 3 as described in Table 2

Table A.2 Cont. Data and test results for specimens with No. 8 hooked bars

	Hook	R_r	b in.	h in.	h_{cl} in.	h_c in.	c_{so} in.	$c_{so,avg}$ in.	c_{th} in.	c_h in.	N_h	Axial Load kips	Long. Reinf. Layout[o]
104	A B	0.078	17.9	10.0	10.5	8.375	3.6 3.8	3.7	2.0 1.9	8.5	2	30	A2
105	A B	0.078	17.9	12.0	10.5	8.375	3.6 3.8	3.7	3.3 3.3	8.5	2	30	A2
106	A B	0.078	19.3	11.3	10.5	8.375	3.6 4.0	3.8	2.3 2.4	9.6	2	30	A2
107	A B	0.078	17.3	12.0	10.5	8.375	3.0 3.0	3.0	3.5 2.8	9.3	2	30	A2
108	A B	0.078	18.8	12.0	10.5	8.375	3.8 3.9	3.8	3.0 2.3	9.1	2	30	A2
109	B A	0.078	17.3	17.9	10.5	8.375	2.8 3.0	2.9	1.9 1.6	9.5	2	80	A2
110	A B	0.078	17.0	13.9	10.5	8.375	2.5 2.5	2.5	2.0 2.0	10.0	2	80	A2
111	A B	0.078	17.1	11.5	10.5	8.375	2.8 2.9	2.8	2.0 2.0	9.5	2	80	A2
112	A B	0.084	17.1	12.3	10.5	8.375	2.6 2.6	2.6	1.8 2.0	9.9	2	80	A2
113	A B	0.084	17.0	12.5	10.5	8.375	2.5 2.6	2.6	2.0 2.0	9.9	2	80	A2
114	A B	0.084	17.0	12.5	10.5	8.375	2.6 2.5	2.6	1.3 2.0	9.9	2	80	A2
115	A B	0.078	16.8	10.0	10.5	8.375	2.8 2.8	2.8	1.8 1.3	9.3	2	30	A2
116	A B	0.078	18.5	10.0	10.5	8.375	3.5 3.5	3.5	2.3 2.0	9.5	2	30	A2
117	A B	0.078	20.4	10.0	10.5	8.375	3.9 4.5	4.2	1.5 2.0	10.0	2	30	A2
118	A B	0.084	17.3	12.3	10.5	8.375	2.8 2.6	2.7	2.0 1.8	9.9	2	80	A2
119	A B	0.084	17.0	12.5	10.5	8.375	2.5 2.5	2.5	2.0 2.0	10.0	2	80	A2
120	A B	0.078	17.1	17.2	10.5	8.375	2.8 2.5	2.6	1.9 1.4	9.9	2	30	A2
121	A B	0.078	17.1	15.3	10.5	8.375	2.5 2.4	2.4	1.5 1.8	10.3	2	30	A2
122	A B	0.073	16.8	14.1	10.5	8.375	2.5 2.5	2.5	2.6 3.0	9.8	2	30	A2
123	A B	0.073	16.6	14.3	10.5	8.375	2.5 2.4	2.4	3.0 2.0	9.8	2	30	A2
124	A B	0.073	16.1	14.1	10.5	8.375	2.5 2.6	2.6	1.8 2.1	9.0	2	30	A2
125	A B	0.073	16.6	10.3	10.5	8.375	2.8 2.9	2.8	2.6 2.9	9.0	2	30	A2
181	B	0.084	16.8	12.3	10.5	8.375	2.5	2.5	1.8	9.8	2	80	A2
127	A B	0.078	16.1	10.0	10.5	8.375	2.9 2.8	2.8	2.8 2.8	8.5	2	30	A2

[o] Longitudinal column configurations shown in Appendix A, Figures A1 – A16

Table A.2 Cont. Data and test results for specimens with No. 8 hooked bars

	Hook	T_{max} lb	T_{ind} lb	T_{total} lb	T lb	T_h lb	T/T_h	$f_{su,max}$ psi	f_{su} psi	$f_{s,ACI}$ psi	Joint shear at failure/ $\sqrt{f_{cm}}$
104	A B	48324 49258	48324 49222	97545	48773	46759	1.04	61169 62352	61738	52435	3.6
105	A B	53960 53810	53960 53810	107770	53885	51599	1.04	68304 68113	68209	59260	3.2
106	A B	50266 49289	50266 49289	99555	49777	56097	0.89	63628 62391	63009	67912	2.6
107	A B	61367 71322	61286 61434	122721	61360	55832	1.10	77680 90281	77671	57719	3.9
108	A B	69451 69474	69451 69474	138925	69463	58583	1.19	87913 87942	87927	60971	4.1
109	B A	91801 97200	91801 89056	180857	90429	84844	1.07	116204 123038	114467	79881	5.1
110	A B	83079 68634	68532 68634	137165	68583	64929	1.06	105164 86878	86814	59883	5.0
111	A B	63275 54846	55094 54733	109827	54914	53922	1.02	80094 69425	69511	48649	4.7
112	A B	55700 55774	53308 55206	108513	54257	64329	0.84	70507 70601	68679	67247	4.3
113	A B	66444 69470	61714 69470	131183	65592	65382	1.00	84107 87936	83027	69147	5.1
114	A B	80648 58800	80648 58340	138988	69494	67783	1.03	102086 74430	87967	72985	5.3
115	A B	56092 66796	56092 59870	115962	57981	61189	0.95	71002 84551	73394	70503	4.5
116	A B	53926 56134	53865 56048	109914	54957	57980	0.95	68261 71055	69566	65996	3.8
117	A B	39553 41461	39553 38589	78142	39071	59964	0.65	50067 52483	49457	68864	2.5
118	A B	78824 66728	75418 64012	139430	69715	64769	1.08	99777 84466	88247	68323	5.4
119	A B	68947 69633	68071 69604	137674	68837	65920	1.04	87275 88143	87136	70469	5.2
120	A B	77125 72603	74150 72603	146753	73377	87983	0.83	97627 91903	92882	96574	4.3
121	A B	93116 81340	83412 81340	164752	82376	81257	1.01	117868 102962	104273	90710	5.1
122	A B	66726 75878	66726 66001	132727	66363	68375	0.97	84463 96048	84004	72061	4.8
123	A B	84900 72000	* 72000	72000	72000	73010	0.99	107468 91139	91139	80992	2.4
124	A B	72359 77425	72321 70619	142939	71470	73090	0.98	91593 98006	90468	78770	5.3
125	A B	48024 47008	47948 47008	94956	47478	50723	0.94	60790 59503	60099	48878	4.6
181	B	82800	82800	82800	82800	64937	1.28	104800	104800	68100	3.4
127	A B	56006 51206	49326 51206	100532	50266	53859	0.93	70893 64818	63628	58938	4.1

Table A.2 Cont. Data and test results for specimens with No. 8 hooked bars

	Hook	Slip at Failure in.	Failure Type	f_{yt} ksi	d_{tr} in.	$A_{tr,l}$ in.^{2}	N_{tr}	s_{tr} in.	A_{cti} in.^{2}	N_{cti}	s_{cti} in.	d_s in.	s_s in.	d_{cto} in.	N_{cto}	A_s in.^{2}	f_{ys} ksi
104	A B	0.31 .340(.147)	F F	60	0.38	0.11	2	7.13	1.20	6	4.0	0.50	1.50	-	-	3.16	60
105	A B	- -	S F	60	0.38	0.11	2	7.13	1.20	6	4.0	0.63	3.50	-	-	3.16	60
106	A B	0.15	F/S F/S	60	0.38	0.11	2	8.00	0.88	8	4.0	0.50	4.00	0.375	2	3.16	60
107	A B	0.171 .285(.129)	F/S F/S	60	0.5	0.20	2	7.13	1.20	6	4.0	0.50	2.00	-	-	3.16	60
108	A B	0.26 .181(.104)	S/F F/S	60	0.5	0.20	2	7.13	1.20	6	4.0	0.50	2.00	-	-	3.16	60
109	B A	- -	F/S F/S	60	0.38	0.11	4	3.00	2.00	10	3.0	0.50	3.00	-	-	3.16	60
110	A B	- -	F F	60	0.38	0.11	4	3.00	2.00	10	3.0	0.50	3.00	-	-	3.16	60
111	A B	- -	F F/S	60	0.38	0.11	4	3.00	2.00	10	3.0	0.50	3.00	-	-	3.16	60
112	A B	- 0.213	S S	60	0.38	0.11	5	3.00	1.10	10	3.0	0.63	5.00	-	-	3.16	60
113	A B	0.203 0.235	F/S S/F	60	0.38	0.11	5	3.00	1.10	10	3.0	0.63	5.00	-	-	3.16	60
114	A B	- -	S/F S/F	60	0.38	0.11	5	3.00	1.10	10	3.0	0.63	5.00	-	-	3.16	60
115	A B	0.253 .237(.033)	F/S F/S	60	0.38	0.11	5	3.00	2.00	10	3.0	0.50	1.75	-	-	3.16	60
116	A B	- .251(.249)	F F/S	60	0.38	0.11	5	3.00	2.00	10	3.0	0.50	1.75	-	-	3.16	60
117	A B	0.388 0.754	S/F F	60	0.38	0.11	5	3.00	2.00	10	3.0	0.50	1.75	-	-	3.16	60
118	A B	0.129 -	F/S F	60	0.38	0.11	5	3.00	1.10	10	3.0	0.63	5.00	-	-	3.16	60
119	A B	- -	F/S F/S	60	0.38	0.11	5	3.00	1.10	10	3.0	0.63	5.00	-	-	3.16	60
120	A B	0.196 -	F/S F/S	60	0.38	0.11	5	3.00	0.55	5	3.0	0.38	3.50	0.375	2	3.16	60
121	A B	- -	S/F F/S	60	0.38	0.11	5	3.00	1.00	5	3.0	0.50	3.00	0.375	1	3.16	60
122	A B	- -	S/F S/F	60	0.38	0.11	5	3.00	0.55	5	3.0	0.38	3.50	0.5	2	3.16	60
123	A B		S S	60	0.38	0.11	5	3.00	0.55	5	3.0	0.38	3.50	0.5	2	3.16	60
124	A B		F/S F/S	60	0.38	0.11	5	3.00	0.55	5	3.0	0.38	3.50	0.375	1	3.16	60
125	A B	 0.321	F F	60	0.38	0.11	5	3.00	1.55	5	3.0	0.50	3.00	0.5	1	3.16	60
181	B	0.164	F/S	60	0.375	0.11	5	3.0	1.10	10	3.0	0.63	3.50	-	-	3.16	60
127	A B	0.3 .375 (.092)	F F	60	0.38	0.11	5	3.00	1.20	6	3.0	0.50	1.50	-	-	3.16	60

Table A.2 Cont. Data and test results for specimens with No. 8 hooked bars

	Specimen	Hook	Bend Angle	Trans. Reinf. Orient.	Hook Bar Type	ℓ_{eh} in.	$\ell_{eh,avg}$ in.	f'_c psi	Age days	d_b in.
128	8-8-90-5#3-i-2.5-2-9‡	A B	90°	Para	A615	8.6 9.0	8.8	7710	25	1
129	8-12-90-5#3-i-2.5-2-9	A B	90°	Para	A1035[b]	9.0 9.0	9.0	11160	77	1
130	8-12-90-5#3-i-2.5-2-10	A B	90°	Para	A1035[c]	9.0 9.9	9.4	11800	38	1
131	8-12-90-5#3-i-2.5-2-12‡	A B	90°	Para	A1035[c]	12.2 12.3	12.2	11760	34	1
132	8-12-90-5#3vr-i-2.5-2-10	A B	90°	Perp	A1035[c]	10.3 10.2	10.2	11800	38	1
133	8-12-90-4#3vr-i-2.5-2-10	A B	90°	Perp	A1035[c]	10.6 10.3	10.4	11850	39	1
134	8-15-90-5#3-i-2.5-2-6	A B	90°	Para	A1035[c]	6.5 6.1	6.3	15800	60	1
135	8-15-90-5#3-i-2.5-2-10	A B	90°	Para	A1035[c]	10.6 9.7	10.1	15800	60	1
136	8-5-90-5#3-i-3.5-2-15	A B	90°	Para	A1035[b]	15.8 15.8	15.8	4850	7	1
137	8-5-90-5#3-i-3.5-2-13	A B	90°	Para	A1035[b]	13.3 13.0	13.1	5570	12	1
138	8-5-90-5#3-i-3.5-2-12(1)	A B	90°	Para	A1035[c]	12.8 12.3	12.5	5090	7	1
139	8-5-90-5#3-i-3.5-2-12	A B	90°	Para	A1035[c]	12.5 11.8	12.1	6440	9	1
140	8-8-90-5#3-i-3.5-2-8	A B	90°	Para	A1035[b]	8.0 8.0	8.0	7910	15	1
141	8-12-90-5#3-i-3.5-2-9*	A B	90°	Para	A1035[b]	9.0 9.0	9.0	11160	77	1
142	8-5-90-4#4s-i-2.5-2-15	A B	90°	Para	A1035[b]	15.6 15.6	15.6	4810	6	1
143	8-5-90-4#4s-i-2.5-2-12(1)	A B	90°	Para	A1035[c]	12.3 12.5	12.4	5180	8	1
144	8-5-90-4#4s-i-2.5-2-12	A B	90°	Para	A1035[c]	12.0 12.6	12.3	6210	8	1
145	8-5-90-4#4s-i-3.5-2-15	A B	90°	Para	A1035[b]	15.5 15.1	15.3	4810	6	1
146	8-5-90-4#4s-i-3.5-2-12(1)	A B	90°	Para	A1035[c]	12.0 11.9	11.9	5910	14	1
147	8-5-90-4#4s-i-3.5-2-12	A B	90°	Para	A1035[c]	12.0 12.5	12.3	5960	7	1

‡ Specimen contained A1035 Grade 120 for column longitudinal steel
[a] Heat 1, [b] Heat 2, [c] Heat 3 as described in Table 2

Table A.2 Cont. Data and test results for specimens with No. 8 hooked bars

	Hook	R_r	b in.	h in.	h_{cl} in.	h_c in.	c_{so} in.	$c_{so,avg}$ in.	c_{th} in.	c_h in.	N_h	Axial Load kips	Long. Reinf. Layout[o]
128	A B	0.073	17.8	11.0	10.5	8.375	2.8 3.3	3.0	2.4 2.0	9.8	2	30	A2
129	A B	0.078	16.6	11.5	10.5	8.375	2.5 2.6	2.6	2.5 2.5	9.5	2	30	A2
130	A B	0.073	16.8	12.2	10.5	8.375	2.6 2.3	2.4	3.2 2.3	9.9	2	30	A2
131	A B	0.073	16.9	14.2	10.5	8.375	2.4 2.5	2.4	2.0 1.9	10.0	2	30	A2
132	A B	0.073	16.6	11.9	10.5	8.375	2.5 2.4	2.4	1.7 1.7	9.8	2	30	A2
133	A B	0.073	16.0	12.4	10.5	8.375	2.5 2.5	2.5	1.8 2.1	9.0	2	30	A2
134	A B	0.073	17.0	8.3	10.5	8.375	2.6 2.6	2.6	1.8 2.2	9.8	2	30	A11
135	A B	0.073	16.7	12.1	10.5	8.375	2.4 2.4	2.4	1.6 2.4	9.9	2	30	A11
136	A B	0.078	19.3	17.0	10.5	8.375	3.6 3.5	3.5	1.3 1.3	10.3	2	30	A2
137	A B	0.078	19.3	15.4	10.5	8.375	3.4 3.5	3.4	2.1 2.4	10.4	2	30	A2
138	A B	0.073	18.7	14.3	10.5	8.375	3.5 3.4	3.5	1.6 2.1	9.8	2	30	A2
139	A B	0.073	18.6	14.2	10.5	8.375	3.4 3.5	3.4	1.7 2.4	9.8	2	30	A2
140	A B	0.078	18.0	10.0	10.5	8.375	3.5 3.6	3.6	2.0 2.0	8.9	2	30	A2
141	A B	0.078	18.1	11.5	10.5	8.375	3.3 3.4	3.3	2.5 2.5	9.5	2	30	A2
142	A B	0.078	17.0	17.3	10.5	8.375	3.0 2.9	2.9	1.6 1.6	9.1	2	30	A2
143	A B	0.073	17.1	14.4	10.5	8.375	2.5 2.6	2.6	2.1 1.9	10.0	2	30	A2
144	A B	0.073	16.6	14.3	10.5	8.375	2.6 2.5	2.6	2.3 1.6	9.5	2	30	A2
145	A B	0.078	19.6	17.3	10.5	8.375	4.1 4.0	4.1	1.8 2.1	9.5	2	30	A2
146	A B	0.073	19.0	14.3	10.5	8.375	3.8 3.5	3.6	2.3 2.4	9.8	2	30	A2
147	A B	0.073	18.3	14.4	10.5	8.375	3.8 3.5	3.6	2.4 1.9	9.0	2	30	A2

[o] Longitudinal column configurations shown in Appendix A, Figures A1 – A16

Table A.2 Cont. Data and test results for specimens with No. 8 hooked bars

	Hook	T_{max} lb	T_{ind} lb	T_{total} lb	T lb	T_h lb	T/T_h	$f_{su,max}$ psi	f_{su} psi	$f_{s,ACI}$ psi	Joint shear at failure/ $\sqrt{f_{cm}}$
128	A B	64834 64027	64834 63961	128795	64397	61438	1.05	82068 81047	81516	69089	4.6
129	A B	66512 63119	66512 62994	129507	64753	67620	0.96	84193 79897	81966	84890	3.9
130	A B	66000 64599	64479 64582	129061	64530	71117	0.91	83544 81771	81684	91533	3.5
131	A B	90544 86469	88954 86469	175422	87711	88168	0.99	114613 109454	111027	118308	4.1
132	A B	59428 64145	59428 61011	120439	60219	67059	0.90	75225 81196	76227	99111	3.4
133	A B	80288 59267	59214 59267	118481	59241	66818	0.89	101630 75021	74988	81157	3.3
134	A B	48315 48683	48315 48683	96998	48499	55384	0.88	61158 61624	61391	70845	3.3
135	A B	111610 90223	89783 90223	180007	90003	80498	1.12	141278 114207	113928	113633	4.3
136	A B	81187 87144	81187 79494	160681	80341	89047	0.90	102768 110309	101697	97934	4.3
137	A B	89620 75971	78290 75847	154137	77069	78783	0.98	113443 96166	97555	87460	4.2
138	A B	78862 75869	78813 74050	152863	76431	74137	1.03	99825 96037	96749	79625	4.9
139	A B	79156 79258	79156 79145	158301	79150	76237	1.04	100198 100327	100190	86877	4.5
140	A B	55391 56240	55391 56228	111619	55810	57384	0.97	70116 71190	70645	63527	4.2
141	A B	68822 82227	68822 66841	135663	67831	67620	1.00	87116 104084	85863	84890	3.7
142	A B	93337 107709	93337 93969	187306	93653	92056	1.02	118148 136340	118548	77404	5.6
143	A B	100177 90092	91540 90092	181632	90816	77607	1.17	126806 114041	114957	63618	6.2
144	A B	116352 99672	99838 99672	199509	99755	80367	1.24	147281 126167	126272	69305	6.5
145	A B	105974 90156	91613 90118	181730	90865	90541	1.00	134144 114121	115019	75856	4.7
146	A B	115165 92876	113609 77301	190910	95455	77612	1.23	145779 117565	120829	65551	5.6
147	A B	103861 96919	99392 96919	196312	98156	79340	1.24	131470 122683	124248	67551	5.9

Table A.2 Cont. Data and test results for specimens with No. 8 hooked bars

	Hook	Slip at Failure in.	Failure Type	f_{yt} ksi	d_{tr} in.	$A_{tr,l}$ in.^{2}	N_{tr}	s_{tr} in.	A_{cti} in.^{2}	N_{cti}	s_{cti} in.	d_s in.	s_s in.	d_{cto} in.	N_{cto}	A_s in.^{2}	f_{ys} ksi
128	A B	0.047 0	F F	60	0.38	0.11	5	3.00	-	-	-	0.38	4.00	-	-	3.16	120
129	A B	0.224 0.252	F/S F/S	60	0.38	0.11	5	3.00	0.88	8	4.0	0.50	4.00	0.375	2	3.16	60
130	A B	0.44 0.547	F/S S/F	60	0.38	0.11	5	3.00	-	-	-	0.50	1.75	-	-	3.16	60
131	A B	- -	F/S S/F	60	0.38	0.11	5	3.00	-	-	-	0.38	4.00	-	-	3.16	120
132	A B	0.236 0.246	F F	60	0.38	0.11	5	1.75	-	-	-	0.50	1.75	-	-	3.16	60
133	A B	0.123 0.101	F/S F	60	0.38	0.11	4	2.25	-	-	-	0.50	1.75	-	-	3.16	60
134	A B	- -	F F	60	0.38	0.11	5	3.00	-	-	-	0.38	2.75	-	-	6.32	60
135	A B	- 0.407	F/S F/S	60	0.38	0.11	5	3.00	-	-	-	0.38	3.00	-	-	6.32	60
136	A B	.214(.026) -	S/F S/F	60	0.38	0.11	5	3.00	0.55	5	3.0	0.38	3.50	0.375	2	3.16	60
137	A B	- -	S S/F	60	0.38	0.11	5	3.00	1.00	5	3.0	0.50	3.00	0.375	1	3.16	60
138	A B	- -	S/F S	60	0.38	0.11	5	3.00	0.55	5	3.0	0.38	3.50	0.5	2	3.16	60
139	A B	 0.162	F F/S	60	0.38	0.11	5	3.00	0.55	5	3.0	0.38	3.50	0.5	2	3.16	60
140	A B	- -	F F	60	0.38	0.11	5	3.00	1.20	6	3.0	0.50	1.50	-	-	3.16	60
141	A B	 0.415	F/S F/S	60	0.38	0.11	5	3.00	0.88	8	4.0	0.50	4.00	0.375	2	3.16	60
142	A B	0.21 -	S/F F/S	60	0.5	0.20	4	4.00	0.88	8	4.0	0.38	3.50	0.375	2	3.16	60
143	A B	- -	F/S F/S	60	0.5	0.20	4	4.00	1.60	8	4.0	0.50	3.50	0.5	1	3.16	60
144	A B		F/S S/F	60	0.5	0.20	4	4.00	1.60	8	4.0	0.50	3.50	0.5	1	3.16	60
145	A B	- -	F/S S/F	60	0.5	0.20	4	4.00	0.88	8	4.0	0.38	3.50	0.375	2	3.16	60
146	A B	- -	S F/S	60	0.5	0.20	4	4.00	1.60	8	4.0	0.50	3.50	0.5	1	3.16	60
147	A B		S/F F/S	60	0.5	0.20	4	4.00	1.60	8	4.0	0.50	3.50	0.5	1	3.16	60

Table A.3 Data and test results for specimens with No. 11 hooked bars

	Specimen	Hook	Bend Angle	Trans. Reinf. Orient.	Hook Bar Type	ℓ_{eh} in.	$\ell_{eh,avg}$ in.	f'_c psi	Age days	d_b in.
148	11-8-90-0-o-2.5-2-25	A B	90°	Para	A1035	25.3 25.1	25.2	9460	9	1.41
149	11-8-90-0-o-2.5-2-17	A B	90°	Para	A1035	16.8 16.4	16.6	9460	9	1.41
150	11-12-90-0-o-2.5-2-17	A B	90°	Para	A1035	17.1 16.6	16.9	11800	36	1.41
151	11-5-90-0-i-2.5-2-14	A B	90°	Para	A615	13.5 15.3	14.4	4910	13	1.41
152	11-5-90-0-i-2.5-2-26	A B	90°	Para	A1035	26.0 26.0	26.0	5360	6	1.41
153	11-8-90-0-i-2.5-2-17	A B	90°	Para	A1035	17.3 18.0	17.6	9460	9	1.41
154	11-8-90-0-i-2.5-2-21	A B	90°	Para	A1035	20.0 21.1	20.6	7870	6	1.41
155	11-8-90-0-i-2.5-2-17	A B	90°	Para	A1035	16.3 18.1	17.2	8520	7	1.41
156	11-12-90-0-i-2.5-2-17	A B	90°	Para	A1035	16.1 16.9	16.5	11880	35	1.41
157	11-12-90-0-i-2.5-2-17.5	A B	90°	Para	A1035	17.6 17.8	17.7	13330	31	1.41
158	11-12-90-0-i-2.5-2-25	A B	90°	Para	A1035	24.9 24.4	24.6	13330	34	1.41
159	11-15-90-0-i-2.5-2-24	A B	90°	Para	A1035	24.0 24.8	24.4	16180	62	1.41
160	11-15-90-0-i-2.5-2-10‡	A B	90°	Para	A615	9.5 9.5	9.5	14050	76	1.41
161	11-15-90-0-i-2.5-2-15‡	A B	90°	Para	A1035	14.0 14.0	14.0	14050	77	1.41
162	11-5-90-0-i-3.5-2-17	A B	90°	Para	A1035	18.1 17.6	17.9	5600	24	1.41
163	11-5-90-0-i-3.5-2-14	A B	90°	Para	A615	14.8 15.3	15.0	4910	13	1.41
164	11-5-90-0-i-3.5-2-26	A B	90°	Para	A1035	26.3 25.8	26.0	5960	8	1.41
165	11-5-90-1#4-i-2.5-2-17	A B	90°	Para	A1035	17.8 17.6	17.7	5790	25	1.41
166	11-5-90-1#4-i-3.5-2-17	A B	90°	Para	A1035	17.8 17.8	17.8	5790	25	1.41
167	11-5-90-2#3-i-2.5-2-17	A B	90°	Para	A1035	17.4 17.8	17.6	5600	24	1.41
168	11-5-90-2#3-i-2.5-2-14	A B	90°	Para	A615	13.5 13.8	13.6	4910	13	1.41
169	11-12-90-2#3-i-2.5-2-17.5	A B	90°	Para	A1035	18.0 17.5	17.8	13710	30	1.41
170	11-15-90-2#3-i-2.5-2-23	A B	90°	Para	A1035	23.5 23.5	23.5	16180	62	1.41
171	11-15-90-2#3-i-2.5-2-10‡	A B	90°	Para	A615	10.0 10.0	10.0	14045	76	1.41
172	11-15-90-2#3-i-2.5-2-15‡	A B	90°	Para	A1035	14.0 14.3	14.1	14045	80	1.41

‡ Specimen contained A1035 Grade 120 for column longitudinal steel

Table A.3 Cont. Data and test results for specimens with No. 11 hooked bars

	Hook	R_r	b in.	h in.	h_{cl} in.	h_c in.	c_{so} in.	$c_{so,avg}$ in.	c_{th} in.	c_h in.	N_h	Axial Load kips	Long. Reinf. Layout[o]
148	A B	0.085	21.9	27.4	19.5	8.375	2.6 2.9	2.8	2.2 2.3	13.6	2	169	A16
149	A B	0.085	21.4	19.3	19.5	8.375	2.5 2.4	2.4	2.6 2.9	13.8	2	116	A16
150	A B	0.085	21.6	19.3	19.5	8.375	2.5 2.5	2.5	2.2 2.7	13.8	2	117	A7
151	A B	0.069	21.6	16.0	19.5	8.375	2.8 2.8	2.8	2.5 0.8	13.3	2	97	A7
152	A B	0.085	21.5	28.1	19.5	8.375	2.5 2.9	2.7	2.1 2.1	13.3	2	169	A12
153	A B	0.085	21.2	19.3	19.5	8.375	2.5 2.5	2.5	2.0 1.3	13.4	2	114	A16
154	A B	0.085	21.1	23.4	19.5	8.375	2.5 2.8	2.6	3.4 2.3	13.0	2	138	A13
155	A B	0.085	21.3	19.3	19.5	8.375	2.5 2.5	2.5	3.0 1.1	13.5	2	115	A8
156	A B	0.085	21.2	19.3	19.5	8.375	2.5 2.6	2.6	3.1 2.4	13.3	2	114	A13
157	A B	0.085	22.8	19.8	19.5	8.375	3.8 2.5	3.1	2.1 2.0	13.8	2	126	A7
158	A B	0.085	20.9	27.3	19.5	8.375	2.5 2.5	2.5	2.4 2.9	13.1	2	160	A12
159	A B	0.085	21.3	26.0	19.5	8.375	2.5 2.5	2.5	2.0 1.3	13.5	2	155	A11
160	A B	0.085	21.9	12.0	19.5	8.375	2.8 2.7	2.7	2.5 2.5	13.6	2	74	A15
161	A B	0.085	21.4	17.0	19.5	8.375	2.8 2.8	2.8	3.0 3.0	13.0	2	102	A15
162	A B	0.085	23.8	20.0	19.5	8.375	4.0 3.9	3.9	1.8 2.5	13.1	2	133	A7
163	A B	0.069	23.7	16.3	19.5	8.375	3.8 3.9	3.8	1.5 1.0	13.3	2	108	A7
164	A B	0.085	23.8	28.4	19.5	8.375	3.8 3.8	3.8	2.1 2.6	13.5	2	189	A12
165	A B	0.085	21.4	19.6	19.5	8.375	2.8 2.8	2.8	1.8 2.0	13.1	2	117	A7
166	A B	0.085	23.6	19.5	19.5	8.375	3.8 3.9	3.8	1.8 1.8	13.1	2	129	A7
167	A B	0.085	21.3	19.6	19.5	8.375	2.5 2.6	2.6	2.3 1.8	13.4	2	117	A7
168	A B	0.069	21.7	16.0	19.5	8.375	2.8 2.9	2.8	2.5 2.3	13.3	2	97	A7
169	A B	0.085	21.1	19.5	19.5	8.375	2.5 2.5	2.5	1.5 2.0	13.3	2	115	A7
170	A B	0.085	21.3	25.0	19.5	8.375	2.8 2.8	2.8	1.5 1.5	13.0	2	149	A11
171	A B	0.085	22.0	12.0	19.5	8.375	2.8 3.0	2.9	2.0 2.0	13.4	2	74	A15
172	A B	0.085	21.5	17.0	19.5	8.375	2.6 2.6	2.6	3.0 2.8	13.6	2	102	A15

[o] Longitudinal column configurations shown in Appendix A, Figures A1 – A16

Table A.3 Cont. Data and test results for specimens with No. 11 hooked bars

	Hook	T_{max} lb	T_{ind} lb	T_{total} lb	T lb	T_h lb	T/T_h	$f_{su,max}$ psi	f_{su} psi	$f_{s,ACI}$ psi	Joint shear at failure/ $\sqrt{f_{cm}}$
148	A B	194500 170700	178670 170860	349530	174765	173772	1.01	124679 109423	112029	124103	4.1
149	A B	121403 105721	108779 105638	214417	107209	111429	0.96	77822 67770	68723	81606	3.7
150	A B	123725 105794	105010 105794	210804	105402	121183	0.87	79311 67817	67565	92862	3.2
151	A B	67249 81430	67249 65931	133180	66590	79286	0.84	43108 52199	42686	51027	3.8
152	A B	165682 146801	150653 146801	297454	148727	152421	0.98	106206 94103	95338	96429	4.6
153	A B	131998 141233	131969 132141	264111	132055	119020	1.11	84614 90534	84651	86842	4.6
154	A B	127061 147904	127061 123191	250252	125126	132865	0.94	81449 94810	80209	92409	3.9
155	A B	105626 115172	105537 104020	209557	104779	112427	0.93	67709 73828	67166	80368	3.8
156	A B	148361 120380	148361 120380	268741	134371	118562	1.13	95103 77167	86135	91106	4.1
157	A B	125648 123622	125648 123597	249245	124622	131960	0.94	80544 79245	79886	103451	3.3
158	A B	205050 198110	201395 198091	399486	199743	187403	1.07	131443 126994	128040	144027	4.2
159	A B	212601 231323	212601 213928	426530	213265	196102	1.09	136283 148284	136708	157068	4.2
160	A B	52097 50882	52097 50866	102962	51481	69331	0.74	33395 32617	33001	57045	2.3
161	A B	93327 91008	93327 91008	184335	92168	104578	0.88	59825 58339	59082	84066	2.9
162	A B	105772 117570	105772 110472	216244	108122	103770	1.04	67803 75366	69309	67763	4.2
163	A B	82601 68982	70046 68982	139027	69514	82944	0.84	52949 44219	44560	53246	3.5
164	A B	198346 181661	183026 181481	364508	182254	157184	1.16	127145 116449	116829	101683	4.8
165	A B	99443 119681	99403 103592	202995	101498	115679	0.88	63746 76718	65063	68180	4.4
166	A B	105692 108846	103693 108846	212540	106270	116068	0.92	67751 69773	68122	68421	4.2
167	A B	108406 103234	98172 103218	201390	100695	108250	0.93	69491 66176	64548	66578	4.4
168	A B	77718 77214	77718 77127	154845	77422	81310	0.95	49819 49496	49630	48365	4.4
169	A B	133178 129868	132555 128223	260779	130389	139941	0.93	85371 83249	83583	105286	3.7
170	A B	232100 206900	212550 206600	419150	209575	195050	1.07	148782 132628	134343	151429	4.2
171	A B	64250 63631	64250 63631	127881	63940	79600	0.80	41186 40789	40987	60036	2.8
172	A B	115577 114801	115577 114801	230377	115189	111959	1.03	74088 73590	73839	84801	3.6

Table A.3 Cont. Data and test results for specimens with No. 11 hooked bars

	Hook	Slip at Failure in.	Failure Type	f_{yt} ksi	d_{tr} in.	$A_{tr,l}$ in.^{2}	N_{tr}	s_{tr} in.	A_{cti} in.^{2}	N_{cti}	s_{cti} in.	d_s in.	s_s in.	d_{cto} in.	N_{cto}	A_s in.^{2}	f_{ys} ksi
148	A B	- -	S S	60	-	-	-	-	-	-	-	0.50	6.0	-	-	9.48	60
149	A B	- -	S/F S/TK	60	-	-	-	-	-	-	-	0.50	6.0	-	-	9.48	60
150	A B	0.143 -	F/TK F/TK	60	-	-	-	-	-	-	-	0.50	3.5	-	-	4.74	60
151	A B	0.139 -	F/S S	60	-	-	-	-	2.4	12	4.0	0.50	4.0	0.375	2	4.74	60
152	A B	- -	F/S F/S/TK	60	-	-	-	-	1.86	6	4.0	0.50	4.0	0.375	1	6.32	60
153	A B	- -	F/TK F/TK	60	-	-	-	-	-	-	-	0.50	6.0	-	-	9.48	60
154	A B	- -	F/TK F	60	-	-	-	-	-	-	-	0.50	6.0	-	-	9.40	60
155	A B	- -	S F	60	-	-	-	-	-	-	-	0.50	8.0	-	-	6.28	60
156	A B	- -	S S/F	60	-	-	-	-	-	-	-	0.50	6.0	-	-	9.40	60
157	A B	- 0.25	S/TK S	60	-	-	-	-	2.4	12	4.0	0.50	4.0	-	-	4.74	60
158	A B	- -	S S	60	-	-	-	-	3.6	18	4.0	0.50	4.0	0.5	1	6.32	60
159	A B	- -	S/TK S/TK	60	-	-	-	-	-	-	-	0.50	3.5	-	-	6.32	60
160	A B	- -	F F	60	-	-	-	-	-	-	-	0.50	4.5	-	-	6.94	120
161	A B	- -	S S	60	-	-	-	-	-	-	-	0.50	4.5	-	-	6.94	120
162	A B	0.187 -	S/TK S	60	-	-	-	-	2.4	12	4.0	0.50	4.0	0.375	2	4.74	60
163	A B	- -	F/S F/S/TK	60	-	-	-	-	2.4	12	4.0	0.50	4.0	0.375	2	4.74	60
164	A B	- -	S/F F/S	60	-	-	-	-	1.86	6	4.0	0.50	4.0	0.375	1	6.32	60
165	A B	- -	S/F F/S	60	0.5	0.20	1	8.75	2.2	11	4.0	0.50	4.0	0.375	2	4.74	60
166	A B	- -	S S/F/TK	60	0.5	0.20	1	8.75	2.2	11	4.0	0.50	4.0	0.375	2	4.74	60
167	A B	- -	S/F S/F	60	0.375	0.11	2	8.00	2	10	4.0	0.50	4.0	0.375	2	4.74	60
168	A B	0.206 -	F/S S	60	0.375	0.11	2	8.00	2.4	12	4.0	0.50	4.0	0.375	2	4.74	60
169	A B	- -	S S	60	0.375	0.11	2	12.00	2.4	12	4.0	0.50	4.0	-	-	4.74	60
170	A B	- -	S S/F	60	0.375	0.11	2	8.00	-	-	-	0.50	3.0	-	-	6.32	60
171	A B	-	F F	60	0.38	0.11	2	8.00	-	-	-	0.50	4.5	-	-	6.94	120
172	A B	- -	F/S F/S	60	0.375	0.11	2	8.00	-	-	-	0.50	4.5	-	-	6.94	120

Table A.3 Cont. Data and test results for specimens with No. 11 hooked bars

	Specimen	Hook	Bend Angle	Trans. Reinf. Orient.	Hook Bar Type	ℓ_{eh} in.	$\ell_{eh,avg}$ in.	f'_c psi	Age days	d_b in.
173	11-5-90-2#3-i-3.5-2-17	A B	90°	Para	A1035	17.5 17.8	17.6	7070	28	1.41
174	11-5-90-2#3-i-3.5-2-14	A B	90°	Para	A615	14.5 13.4	13.9	4910	12	1.41
175	11-5-90-5#3-i-2.5-2-14	A B	90°	Para	A615	14.3 13.5	13.9	4910	12	1.41
176	11-5-90-5#3-i-3.5-2-14	A B	90°	Para	A615	14.6 14.5	14.6	4910	14	1.41
177	11-8-90-6#3-o-2.5-2-16	A B	90°	Para	A1035	15.9 16.5	16.2	9420	8	1.41
178	11-8-90-6#3-o-2.5-2-22	A B	90°	Para	A1035	21.5 22.3	21.9	9120	7	1.41
179	11-12-90-6#3-o-2.5-2-17	A B	90°	Para	A1035	15.6 17.3	16.4	11800	36	1.41
180	11-5-90-6#3-i-2.5-2-20	A B	90°	Para	A1035	19.5 19.0	19.3	5420	7	1.41
181	11-8-90-6#3-i-2.5-2-16	A B	90°	Para	A1035	15.5 16.4	15.9	9120	7	1.41
182	11-8-90-6#3-i-2.5-2-22	A B	90°	Para	A1035	21.3 21.5	21.4	9420	8	1.41
183	11-8-90-6#3-i-2.5-2-22	A B	90°	Para	A1035	21.9 22.0	21.9	9420	8	1.41
184	11-8-90-6#3-i-2.5-2-15	A B	90°	Para	A1035	15.8 15.3	15.5	7500	5	1.41
185	11-8-90-6#3-i-2.5-2-19	A B	90°	Para	A1035	19.1 19.4	19.2	7500	5	1.41
186	11-12-90-6#3-i-2.5-2-17	A B	90°	Para	A1035	17.1 16.5	16.8	12370	37	1.41
187	11-12-90-6#3-i-2.5-2-16	A B	90°	Para	A1035	14.8 16.0	15.4	13710	31	1.41
188	11-12-90-6#3-i-2.5-2-22	A B	90°	Para	A1035	21.9 21.5	21.7	13710	31	1.41
189	11-15-90-6#3-i-2.5-2-22	A B	90°	Para	A1035	22.3 22.4	22.3	16180	62	1.41
190	11-15-90-6#3-i-2.5-2-10a‡	A B	90°	Para	A615	9.5 10.0	9.8	14045	76	1.41
191	11-15-90-6#3-i-2.5-2-10b‡	A B	90°	Para	A615	9.5 9.8	9.6	14050	77	1.41
192	11-15-90-6#3-i-2.5-2-15‡	A B	90°	Para	A1035	14.5 15.0	14.8	14045	80	1.41
193	11-5-90-6#3-i-3.5-2-20	A B	90°	Para	A1035	20.5 20.3	20.4	5420	7	1.41
194	11-5-90-5#4s-i-2.5-2-20	A B	90°	Para	A1035	20.0 20.3	20.1	5420	7	1.41
195	11-5-90-5#4s-i-3.5-2-20	A B	90°	Para	A1035	19.8 19.3	19.5	5960	8	1.41

‡ Specimen contained A1035 Grade 120 for column longitudinal steel
[a] Heat 1, [b] Heat 2, [c] Heat 3 as described in Table 2

Table A.3 Cont. Data and test results for specimens with No. 11 hooked bars

	Hook	R_r	b in.	h in.	h_{cl} in.	h_c in.	c_{so} in.	$c_{so,avg}$ in.	c_{th} in.	c_h in.	N_h	Axial Load kips	Long. Reinf. Layout[o]
173	A B	0.085	23.4	19.7	19.5	8.375	3.6 3.6	3.6	2.1 2.0	13.4	2	129	A7
174	A B	0.069	23.7	16.1	19.5	8.375	3.8 3.9	3.8	1.6 2.8	13.3	2	107	A7
175	A B	0.069	21.8	16.0	19.5	8.375	2.8 2.9	2.8	1.8 2.5	13.4	2	98	A7
176	A B	0.069	23.7	16.0	19.5	8.375	3.9 3.9	3.9	1.4 1.5	13.1	2	106	A7
177	A B	0.085	21.6	18.1	19.5	8.375	2.5 2.6	2.6	2.3 1.6	13.6	2	109	A16
178	A B	0.085	21.4	24.4	19.5	8.375	2.5 2.6	2.6	2.9 2.1	13.5	2	146	A16
179	A B	0.085	21.4	19.3	19.5	8.375	2.5 2.4	2.4	3.6 2.0	13.8	2	116	A7
180	A B	0.085	20.9	22.3	19.5	8.375	2.6 2.6	2.6	2.8 3.3	12.9	2	130	A7
181	A B	0.085	21.2	18.3	19.5	8.375	2.5 2.5	2.5	2.8 1.9	13.4	2	108	A16
182	A B	0.085	21.4	24.1	19.5	8.375	2.5 2.6	2.6	2.8 2.6	13.5	2	145	A11
183	A B	0.085	21.7	24.2	19.5	8.375	2.6 2.9	2.8	2.3 2.2	13.4	2	147	A16
184	A B	0.085	21.6	17.3	19.5	8.375	2.8 2.5	2.6	1.5 2.0	13.5	2	104	A13
185	A B	0.085	21.4	21.0	19.5	8.375	2.5 2.6	2.6	2.0 1.7	13.5	2	126	A13
186	A B	0.085	21.4	19.1	19.5	8.375	2.6 3.0	2.8	1.9 2.6	13.0	2	114	A13
187	A B	0.085	20.8	18.0	19.5	8.375	2.5 2.5	2.5	3.3 2.0	13.0	2	105	A7
188	A B	0.085	22.1	24.3	19.5	8.375	2.9 3.1	3.0	2.4 2.8	13.3	2	150	A12
189	A B	0.085	21.8	24.0	19.5	8.375	3.0 2.5	2.8	1.8 1.6	13.5	2	147	A10
190	A B	0.085	21.5	12.0	19.5	8.375	2.6 2.8	2.7	2.5 2.0	13.4	2	72	A15
191	A B	0.085	21.4	12.0	19.5	8.375	2.8 2.8	2.8	2.5 2.3	13.0	2	72	A10
192	A B	0.085	21.5	17.0	19.5	8.375	2.6 2.6	2.6	2.5 2.0	13.6	2	102	A15
193	A B	0.085	23.6	22.3	19.5	8.375	3.8 3.9	3.8	1.8 2.0	13.1	2	147	A7
194	A B	0.085	21.4	22.3	19.5	8.375	2.5 2.8	2.6	2.3 2.0	13.4	2	134	A7
195	A B	0.085	23.4	22.0	19.5	8.375	3.8 3.8	3.8	2.3 2.8	13.1	2	144	A7

[o] Longitudinal column configurations shown in Appendix A, Figures A1 – A16

Table A.3 Cont. Data and test results for specimens with No. 11 hooked bars

	Hook	T_{max} lb	T_{ind} lb	T_{total} lb	T lb	T_h lb	T/T_h	$f_{su,max}$ psi	f_{su} psi	$f_{s,ACI}$ psi	Joint shear at failure/ $\sqrt{f_{cm}}$
173	A B	107807 111480	107807 111480	219287	109644	115784	0.95	69107 71462	70284	75074	3.9
174	A B	92719 81848	82732 81817	164549	82275	83132	0.99	59435 52467	52740	49474	4.2
175	A B	105597 94115	96267 94072	190339	95170	96880	0.98	67690 60330	61006	49252	5.3
176	A B	101315 94663	101315 94663	195979	97989	100897	0.97	64946 60682	62814	51693	5.1
177	A B	138900 134714	138793 134714	273507	136753	129138	1.06	89038 86355	87662	99487	4.9
178	A B	186100 170498	170000 170498	340498	170249	168582	1.01	119295 109294	109134	132284	4.7
179	A B	116430 147268	116390 115367	231757	115878	138370	0.84	74635 94403	74281	113068	3.5
180	A B	153119 134977	137617 134927	272543	136272	131706	1.03	98153 86524	87354	89741	5.5
181	A B	147508 129692	136385 129586	265971	132986	126362	1.05	94556 83136	85247	96379	4.9
182	A B	204260 183175	186246 182892	369138	184569	166360	1.11	130936 117420	118314	131369	5.1
183	A B	197739 191344	190740 191344	382084	191042	170431	1.12	126756 122656	122463	134827	5.2
184	A B	142278 108021	108602 108021	216623	108312	117618	0.92	91204 69245	69431	85001	4.6
185	A B	182735 146093	144766 146093	290860	145430	142479	1.02	117138 93650	93224	105395	5.1
186	A B	179693 162285	161019 162277	323295	161648	142884	1.13	115188 104029	103620	118408	4.9
187	A B	115139 127542	115089 115306	230394	115197	135193	0.85	73807 81758	73844	113998	3.6
188	A B	206283 199234	203983 198395	402379	201189	185650	1.08	132233 127714	128967	160802	4.4
189	A B	204557 195710	200084 195534	395618	197809	199073	0.99	131126 125455	126801	179722	4.1
190	A B	83558 81804	83558 81804	165362	82681	91774	0.90	53563 52438	53001	73169	3.7
191	A B	76605 74596	76605 74553	151158	75579	90813	0.83	49106 47818	48448	72244	3.4
192	A B	145670 144870	145664 144870	290534	145267	131029	1.11	93378 92866	93120	110692	4.6
193	A B	150216 135259	136607 135036	271643	135821	138606	0.98	96293 86704	87065	94986	4.8
194	A B	141399 161640	141399 140691	282090	141045	155218	0.91	90640 103615	90414	75057	5.5
195	A B	186703 153546	152402 153532	305934	152967	154532	0.99	119681 98427	98056	76262	5.3

Table A.3 Cont. Data and test results for specimens with No. 11 hooked bars

	Hook	Slip at Failure in.	Failure Type	f_{yt} ksi	d_{tr} in.	$A_{tr,l}$ in.^{2}	N_{tr}	s_{tr} in.	A_{cti} in.^{2}	N_{cti}	s_{cti} in.	d_s in.	s_s in.	d_{cto} in.	N_{cto}	A_s in.^{2}	f_{ys} ksi
173	A B	- -	S/F/TK S	60	0.375	0.11	2	8.00	2	10	4.0	0.50	4.0	0.375	2	4.74	60
174	A B	- -	F/S S/F/TK	60	0.375	0.11	2	8.00	2.4	12	4.0	0.50	4.0	0.375	2	4.74	60
175	A B	0.397 0.375	S/F S/F	60	0.375	0.11	5	4.38	2.4	12	4.0	0.50	4.0	0.375	2	4.74	60
176	A B	- -	F/S S/F	60	0.375	0.11	5	4.38	2.4	12	4.0	0.50	4.0	0.375	2	4.74	60
177	A B	- -	S/F S/F	60	0.375	0.11	6	4.00	-	-	-	0.50	6.0	-	-	9.48	60
178	A B	- -	S S/F	60	0.375	0.11	6	4.00	-	-	-	0.50	6.0	-	-	9.48	60
179	A B	- -	F/S S/F	60	0.375	0.11	6	4.00	-	-	-	0.50	3.5	-	-	4.74	60
180	A B	0.274 -	F/S F/S	60	0.375	0.11	6	4.00	1.2	6	4.0	0.50	4.0	0.375	2	4.74	60
181	A B	- -	F/S F/S	60	0.375	0.11	6	4.00	-	-	-	0.50	6.0	-	-	9.48	60
182	A B	- -	* S	60	0.375	0.11	6	4.00	-	-	-	0.50	2.5	-	-	6.32	60
183	A B	- -	* S/F	60	0.375	0.11	6	4.00	-	-	-	0.50	6.0	-	-	9.48	60
184	A B	- -	S S/F	60	0.375	0.11	6	4.00	-	-	-	0.50	6.0	-	-	9.40	60
185	A B	- -	F/S F/S	60	0.375	0.11	6	4.00	-	-	-	0.50	6.0	-	-	9.40	60
186	A B	0.334 -	F/S SP/S	60	0.375	0.11	6	4.00	-	-	-	0.50	6.0	-	-	9.40	60
187	A B	- 0.952	S/F S/F	60	0.375	0.11	6	4.00	2.4	12	4.0	0.50	4.0	0.375	1	4.74	60
188	A B	- -	S/F F	60	0.375	0.11	6	4.00	3.06	12	4.0	0.50	4.0	0.375	2	6.32	60
189	A B	- -	F/S S/F	60	0.375	0.11	6	4.00	-	-	-	0.50	3.0	-	-	6.32	60
190	A B	- -	F F	60	0.375	0.11	6	4.00	-	-	-	0.50	4.5	-	-	6.94	120
191	A B	 -	F F	60	0.375	0.11	6	4.00	-	-	-	0.50	4.5	-	-	6.32	120
192	A B	- -	F F	60	0.375	0.11	6	4.00	-	-	-	0.50	4.5	-	-	6.94	120
193	A B	- -	S/F S	60	0.375	0.11	6	4.00	1.2	6	4.0	0.50	4.0	0.375	2	4.74	60
194	A B	- -	F/S F/S	60	0.5	0.20	5	5.00	4	10	5.0	0.50	5.0	0.375	2	4.74	60
195	A B	- -	S/F F/S	60	0.5	0.20	5	5.00	4	10	5.0	0.50	5.0	0.375	2	4.74	60

*Test terminated prior to failure of second hooked bar